US 20100069884A1

(19) United States

(12) Patent Application Publication

(10) Pub. No.: US 2010/0069884 A1

(43) Pub. Date: Mar. 18, 2010

Aziz

(54) MULTI-SHAPE CATHETER ASSEMBLY

(76) Inventor: **Kusai Saadeldin Aziz**, Visalia, CA (US)

Correspondence Address:
Ashok Tankha
36 Greenleigh Drive
Sewell, NJ 08080 (US)

(21) Appl. No.: **12/559,516**

(22) Filed: **Sep. 15, 2009**

Related U.S. Application Data

(60) Provisional application No. 61/096,859, filed on Sep. 15, 2008.

Publication Classification

(51) **Int. Cl.**
A61M 25/088 (2006.01)

(52) **U.S. Cl.** **604/528**

(57) **ABSTRACT**

A catheter assembly configurable to multiple shapes is provided. The catheter assembly comprises a detachable, interchangeable and configurable outer catheter and a detachable, interchangeable and flexible inner catheter. The shape of the outer catheter is configured to facilitate guiding of the inner catheter into an inner cavity of a patient's anatomy. The inner catheter is generally coaxial with the outer catheter. The second flexible distal end of the inner catheter enables the inner catheter to engage the inner cavity of the patient's anatomy. A locking element is provided for securing the inner catheter to the outer catheter, when the second flexible distal end of the inner catheter engages the inner cavity of the patient's anatomy to allow equipment or material to be introduced into the inner cavity. The catheter assembly is configured and manipulated to fit inner cavities of multiple anatomies for enabling a medical practitioner to perform medical procedures.

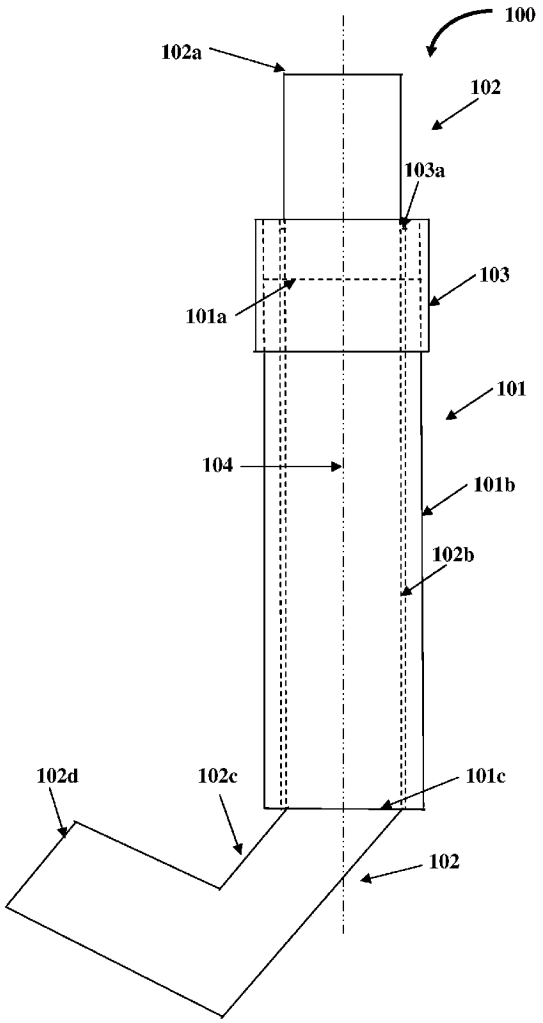

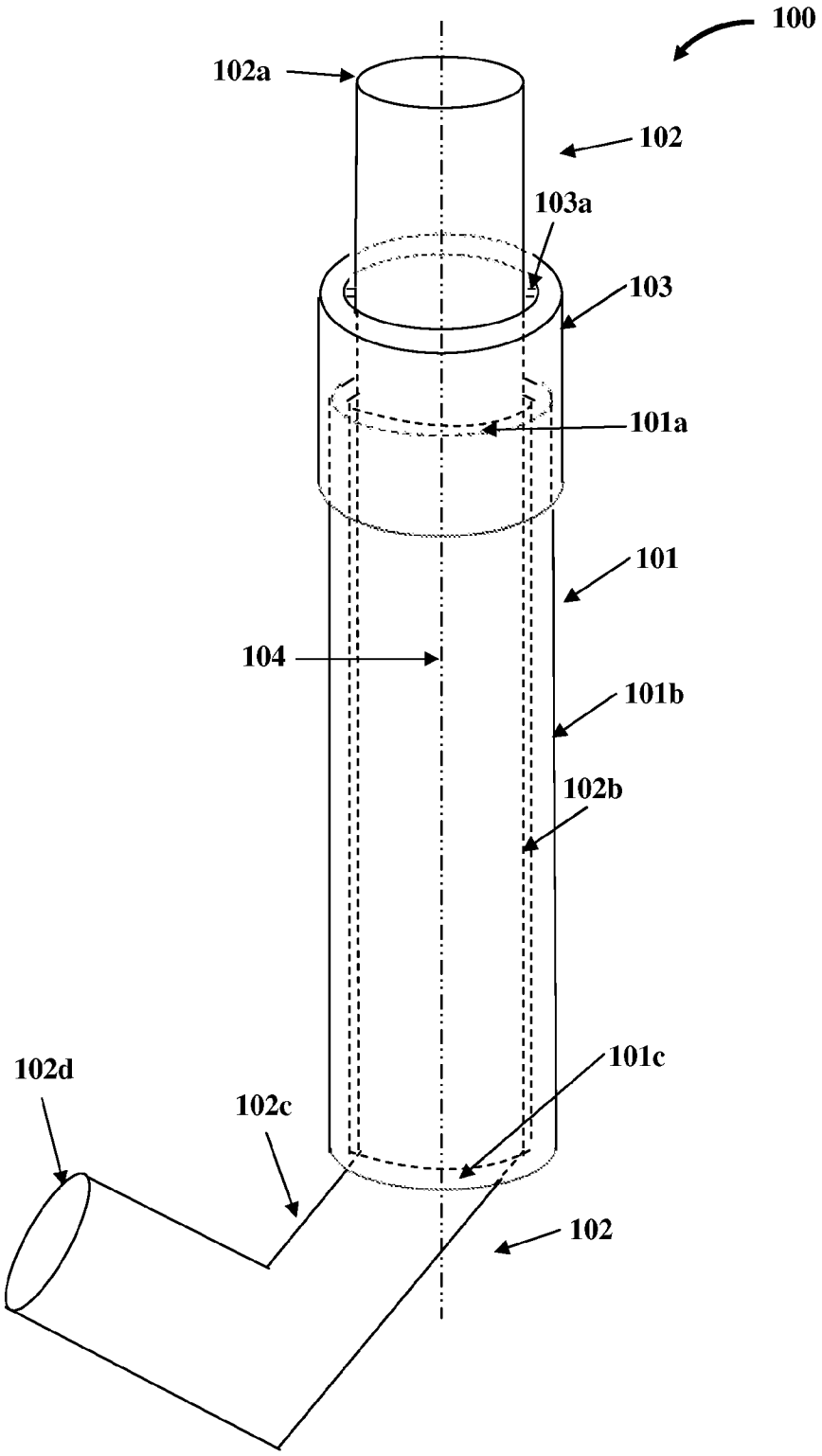
100
102a
102
103a
103
101a
101
104
101b
102b
101c
102d
102c
102

FIG. 1A

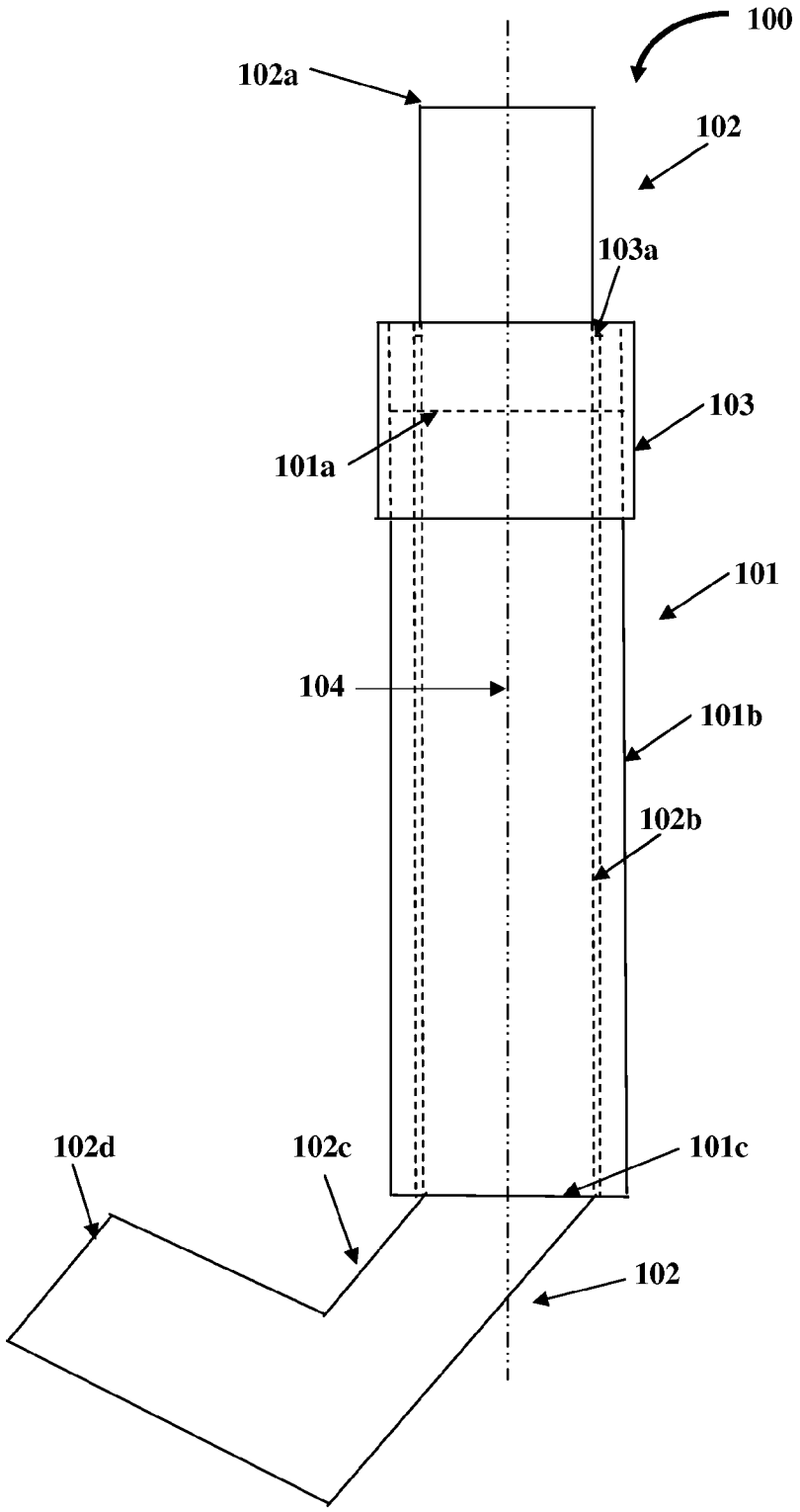
100
102a
102
103a
103
101a
101
104
101b
102b
102d
102c
101c
102

FIG. 1B

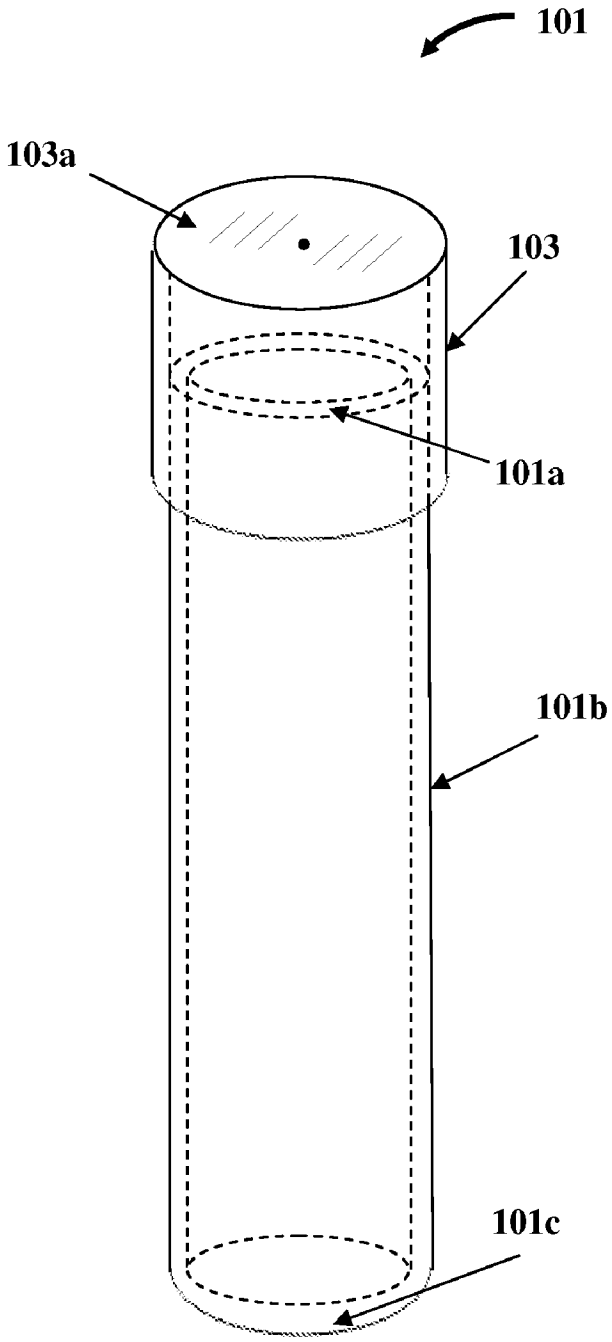

FIG. 2A

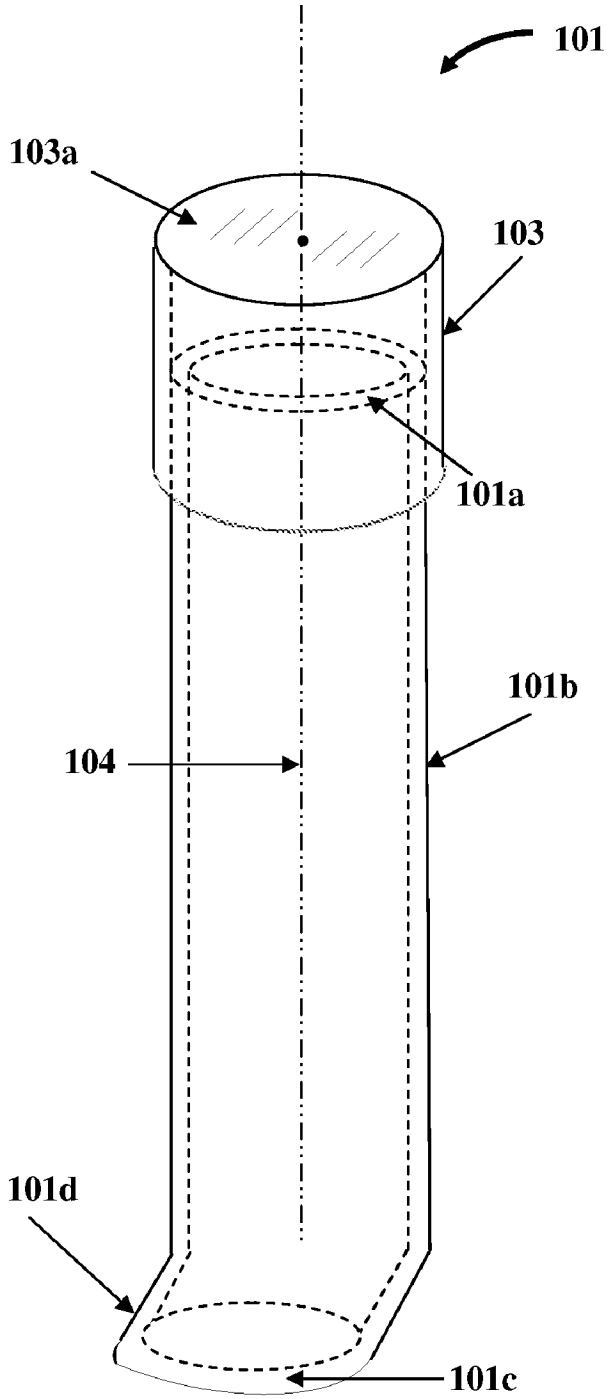

FIG. 2B

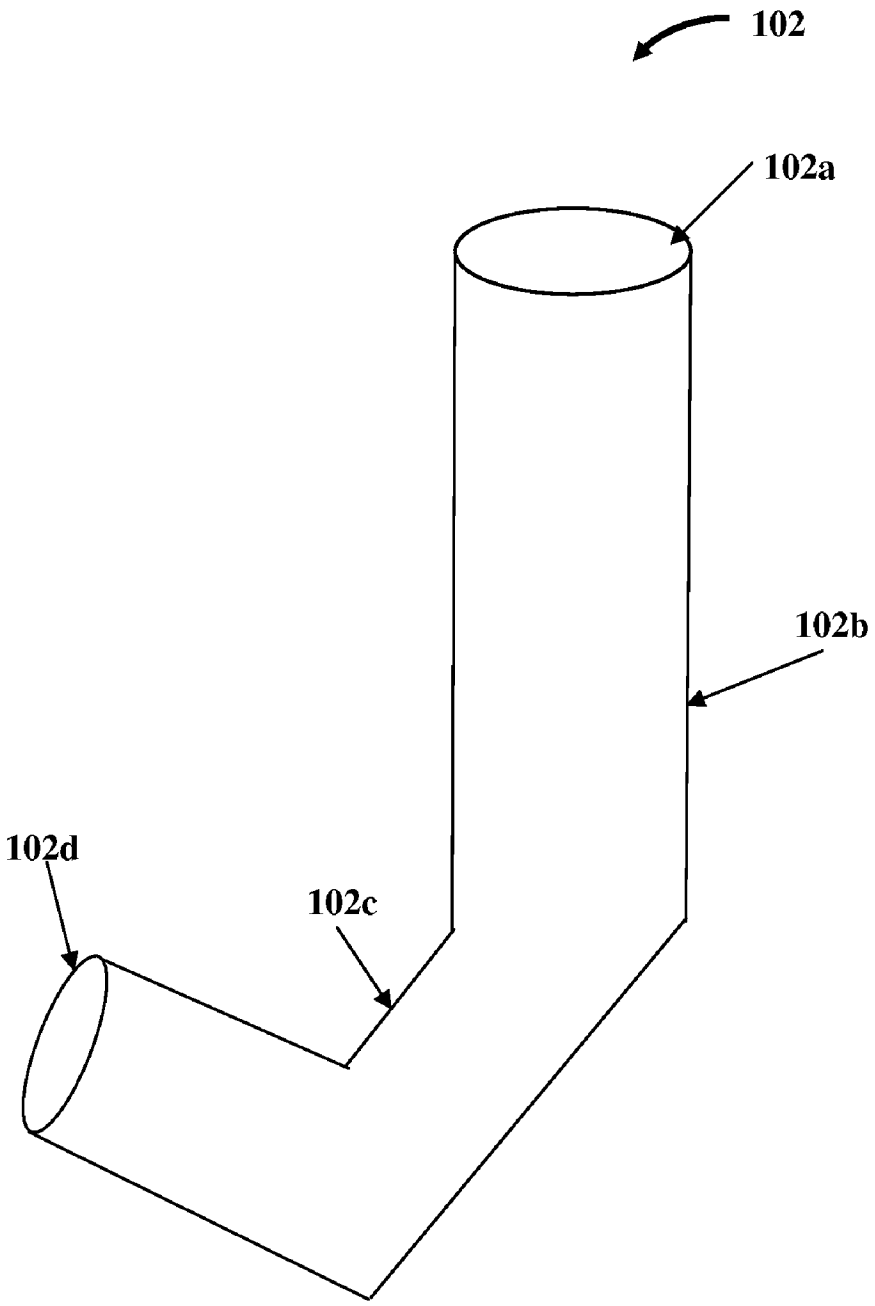

FIG. 3

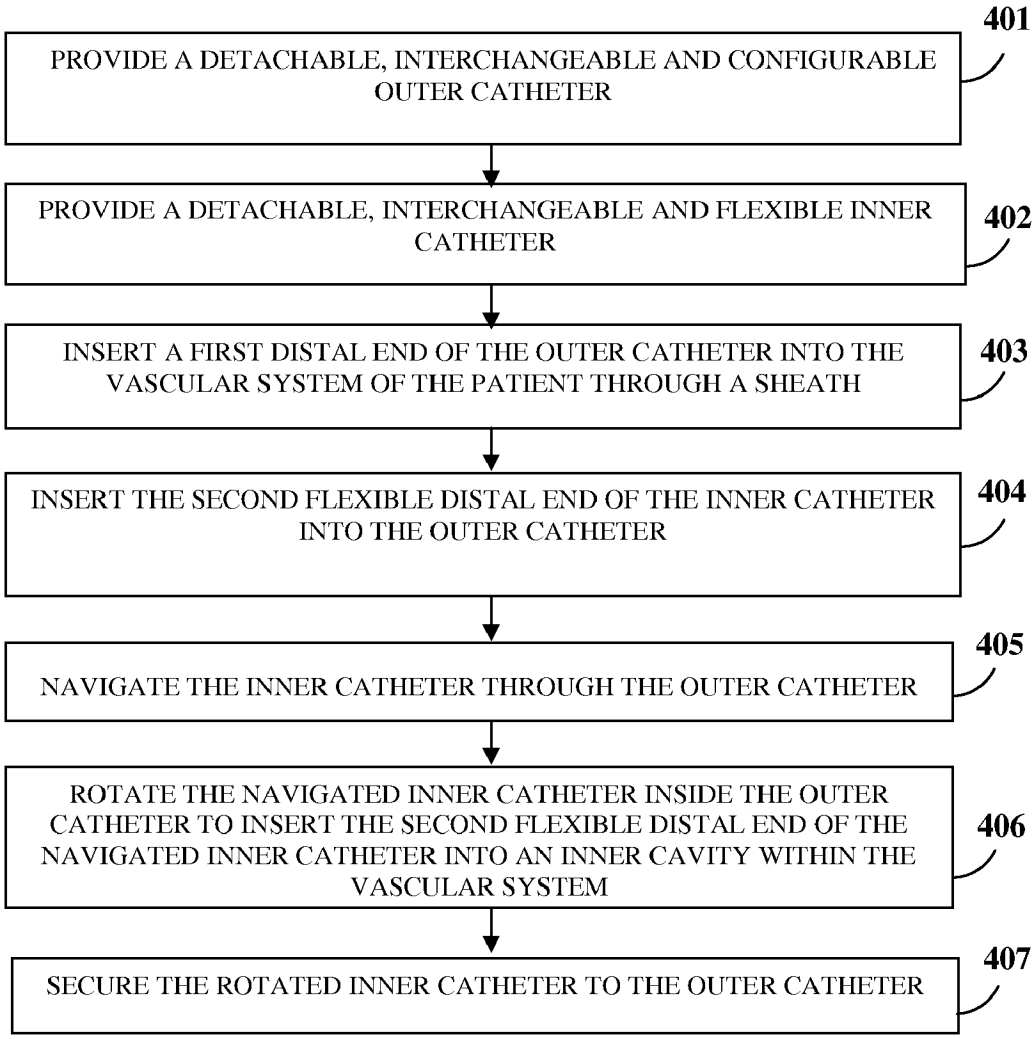
401
PROVIDE A DETACHABLE, INTERCHANGEABLE AND CONFIGURABLE OUTER CATHETER
402
PROVIDE A DETACHABLE, INTERCHANGEABLE AND FLEXIBLE INNER CATHETER
403
INSERT A FIRST DISTAL END OF THE OUTER CATHETER INTO THE VASCULAR SYSTEM OF THE PATIENT THROUGH A SHEATH
404
INSERT THE SECOND FLEXIBLE DISTAL END OF THE INNER CATHETER INTO THE OUTER CATHETER
405
NAVIGATE THE INNER CATHETER THROUGH THE OUTER CATHETER
406
ROTATE THE NAVIGATED INNER CATHETER INSIDE THE OUTER CATHETER TO INSERT THE SECOND FLEXIBLE DISTAL END OF THE NAVIGATED INNER CATHETER INTO AN INNER CAVITY WITHIN THE VASCULAR SYSTEM
407
SECURE THE ROTATED INNER CATHETER TO THE OUTER CATHETER

FIG. 4

MULTI-SHAPE CATHETER ASSEMBLY

CROSS REFERENCE TO RELATED APPLICATIONS

[0001] This application claims the benefit of provisional patent application No. 61/096,859 titled "Multi shape cardiac and vascular catheter", filed on Sep. 15, 2008 in the United States Patent and Trademark Office.

BACKGROUND

[0002] Typically, catheters are thin, flexible tubular devices sized for insertion into body passages and cavities, for example, the vascular system, the gastrointestinal system, etc. of a patient. A catheter is typically introduced into a vein or artery and guided to selected sites in the vascular system for passing one or more devices or fluids into a body lumen or cavity accessed by the catheter. The catheters are, for example, used to diagnose conditions and diseases of the heart, the circulatory system, etc.

[0003] In order to perform a diagnostic cardiac procedure, different catheters are used to engage the origins of the main left and right coronary arteries since these arteries are of different shapes and forms due to genetic variations. Selecting the required size and shape of the catheters to suit individual cases and conditions requires time. In the case of an acute heart attack, for example, time is very crucial. Moreover, there is an individual variation in the width of the thoracic aorta which requires catheters of different sizes. Furthermore, tortuosity of the aorta can sometimes prevent some of these catheters to engage. Also, the non-engagement of a catheter arises due to variable anatomies when percutaneous coronary intervention is planned.

[0004] A catheter is also used for peripheral vascular procedures, both diagnostic and interventional. For example, angiographic catheters are employed to inject contrast media into a vessel in order to clearly view images of the state and shape, topography, functionality and other characteristics of the vessel for diagnosing anatomical abnormalities. The catheterization thus aids in the visualization of any narrowing, blockages, or other abnormalities in the coronary arteries. Since contrast media, for example, dyes, need to be used with multiple catheters even on the same patient, there is wastage of the media. Use of multiple catheters also creates certain difficulties when used in vein grafts.

[0005] Moreover, a medical establishment needs to purchase, stock, and maintain a ready supply of catheters of various sizes and shapes for various medical specialties and services. This large inventory increases the overhead cost of the medical establishment and consequently increases the cost of medical procedures provided by the medical establishment. Furthermore, since catheters are also used to deliver wires, balloons, stents and medication to the coronary arteries, called guide catheters herein, this further raises the overall inventory of catheters in a medical establishment. Hence, there is a need for a single catheter assembly that can be used in multiple medical procedures on multiple variable anatomies. Furthermore, there is a need for a catheter assembly and a method that is more convenient to use and is easily adaptable to multiple cases, thus providing not only usage flexibility but also saving time.

[0006] Hence, there is a need for a catheter assembly configurable to multiple shapes to fit multiple anatomies. There is also a need for a single catheter assembly that decreases the time necessary for conventional medical procedures, reduces catheter cost, and provides benefits to not only the patient and the medical practitioner but also to the medical establishment, for example, by minimizing wastage of contrast media and radiation employed in a diagnostic procedure.

SUMMARY OF THE INVENTION

[0007] This summary is provided to introduce a selection of concepts in a simplified form that are further described in the detailed description of the invention. This summary is not intended to identify key or essential inventive concepts of the claimed subject matter, nor is it intended for determining the scope of the claimed subject matter.

[0008] The catheter assembly disclosed herein addresses the above stated needs for a single catheter assembly that can be modified to obtain different shapes and angles to fit multiple anatomies.

[0009] The catheter assembly disclosed herein is configurable to multiple shapes and comprises a detachable, interchangeable and configurable outer catheter herein referred to as an "outer catheter" and a detachable, interchangeable and flexible inner catheter herein referred to as an "inner catheter". The outer catheter comprises a first frontal end and a first distal end. The shape of the outer catheter is configured to facilitate guiding of the inner catheter into an inner cavity of a patient's anatomy. The inner catheter comprises a second frontal end and a second flexible distal end. The inner catheter is generally coaxial with the outer catheter. The second flexible distal end of the inner catheter enables the inner catheter to engage the inner cavity of the patient's anatomy. A locking element is provided for securing the inner catheter to the outer catheter when the second flexible distal end of the inner catheter engages the inner cavity of the patient's anatomy to allow equipment or material to be introduced into the inner cavity.

[0010] The catheter assembly can be configured and manipulated to different shapes and angles to allow the inner catheter to be inserted into inner cavities for multiple anatomies. For example, the catheter assembly can be configured for inserting into a patient's vascular system, the coronary arteries, etc. for diverse medical specialties and disciplines to allow diagnostic or therapeutic procedures to be performed.

BRIEF DESCRIPTION OF THE DRAWINGS

[0011] The foregoing summary, as well as the following detailed description of the invention, is better understood when read in conjunction with the appended drawings. For the purpose of illustrating the invention, exemplary constructions of the invention are shown in the drawings. However, the invention is not limited to the specific components and methods disclosed herein.

[0012] FIG. **1**A exemplarily illustrates a perspective view of a catheter assembly configurable to multiple shapes.

[0013] FIG. **1**B exemplarily illustrates an orthogonal view of a catheter assembly configurable to multiple shapes.

[0014] FIG. **2**A exemplarily illustrates a perspective view of an embodiment of an outer catheter of the catheter assembly.

[0015] FIG. **2**B exemplarily illustrates a perspective view of another embodiment of the outer catheter of the catheter assembly.

[0016] FIG. **3** exemplarily illustrates an inner catheter of the catheter assembly.

[0017] FIG. **4** illustrates a method of performing a medical procedure on a patient by a medical practitioner using a catheter assembly.

DETAILED DESCRIPTION OF THE INVENTION

[0018] FIG. **1**A exemplarily illustrates a perspective view of a catheter assembly **100** configurable to multiple shapes. An orthogonal view of the catheter assembly **100** is exemplarily illustrated in FIG. **1**B. The catheter assembly **100** disclosed herein comprises a detachable, interchangeable and shape configurable outer catheter **101** as disclosed in the detailed description of FIGS. **2**A-**2**B and a detachable, interchangeable and flexible inner catheter **102** generally coaxial with the outer catheter **101** as disclosed in the detailed description of FIG. **3**. The detachable, interchangeable and shape configurable outer catheter **101** is herein referred to as an "outer catheter". The detachable, interchangeable and flexible coaxial inner catheter **102** is herein referred to as an "inner catheter". The thickness and material specifications of the outer catheter **101** and the inner catheter **102** are suitably adapted to fit diagnostic catheterization standards and requirements and to fit the interventional standard of a guide catheter.

[0019] The outer catheter **101** comprises a first frontal end **101***a* and a first distal end **101***c*. The shape of the outer catheter **101** is configured to facilitate guiding of the inner catheter **102** into an inner cavity of an anatomy of a patient. As used herein, the patient's anatomy refers to one of the many anatomical systems of the patient's body. The inner catheter **102** comprises a second frontal end **102***a* and a second flexible distal end **102***d*. The inner catheter **102** is slightly narrower than the outer catheter **101** to allow for the insertion of the inner catheter **102** into the outer catheter **101**. The inner catheter **102** forms a force fit inside the outer catheter **101**. As used herein, the term "force fit" refers to a minimal clearance between the inner catheter **102** and the outer catheter **101**, so as to form a close fitting inner catheter-outer catheter assembly **100**. The force fit between the coaxial inner catheter **102** and the outer catheter **101** enables relative movement between the outer catheter **101** and the inner catheter **102** when the inner catheter **102** is pushed or pulled from the second frontal end **102***a* or the second flexible distal end **102***d* with the outer catheter **101** held in an immovable position. The outer catheter **101** acts as a guiding conduit for guiding the inner catheter **102** more accurately into an inner cavity of a patient's anatomy. The second flexible distal end **102***d* of the inner catheter **102** is inserted into the outer catheter **101** from the first frontal end **101***a* of the outer catheter **101** through the first distal end **101***c* of the outer catheter **101** such that the second flexible distal end **102***d* of the inner catheter **102** extends beyond the first distal end **101***c* of the outer catheter **101** and is accurately guided into the inner cavity of the patient's anatomy. The outer catheter **101** and the inner catheter **102** of the catheter assembly **100** can be configured and manipulated into different shapes and angles to fit multiple anatomies and multiple inner cavities of the anatomies for enabling a medical practitioner to perform multiple medical procedures for multiple medical specialties and disciplines.

[0020] The outer catheter **101** and the inner catheter **102** are made of a biocompatible flexible polymer. The outer catheter **101** and the inner catheter **102** of the catheter assembly **100** is one of multiple shapes and sizes with one of multiple diameters and lengths. The inner catheter **102** and the outer catheter **101** are constructed using biocompatible elastomeric polymers that are durable, flexible, soft, and easily conformable to the shape of the area to be catheterized in the patient and thus minimize risk of harm to walls of the vasculature. In an embodiment, the material of construction of the outer catheter **101** is a rigid but deformable material, where the outer catheter **101** retains the shape to which the outer catheter **101** is deformed either manually or by a machine, until pressure is applied again on the outer catheter **101** to reconfigure the outer catheter **101** to a different shape. In another embodiment, the material of construction of the outer catheter **101** is pre-molded or preconfigured to facilitate its use with the coaxial inner catheter **102** in a medical procedure. The material of construction of the inner catheter **102** with respect to the outer catheter **101** is relatively flexible and deformable so as to allow the coaxial inner catheter **102** to be moved and manipulated inside and through the outer catheter **101**. In an embodiment, the inner catheter **102**, or a section of the inner catheter **102**, for example, the second flexible distal end **102***d* of the inner catheter **102** is made of a deformable material that retains the shape to which the second flexible distal end **102***d* of the inner catheter **102** is deformed until a subsequent pressure is applied to the inner catheter **102** to reconfigure the inner catheter **102** to a different shape.

[0021] The biocompatible elastomeric polymers used in the construction of the outer catheter **101** and the inner catheter **102** comprise, for example, plastics such as urethane, polyamide such as nylon, silicone, polypropylene, polysulfone, polystyrene, polycarbonate, synthetic rubber, etc. Additionally, homopolymers and copolymers of vinyl acetate such as ethylene vinyl acetate copolymer, polyvinylchlorides, homopolymers and copolymers of acrylates such as polymethylmethacrylate, polyethylmethacrylate, polymethacrylate, ethylene glycol dimethacrylate and other similar compounds are also used. Further, to enhance lubricity in order to facilitate tracking through the vasculature, polytetraflouroethylene, polyethylene including urethane may be used.

[0022] FIG. **2**A exemplarily illustrates a perspective view of an embodiment of the outer catheter **101** of the catheter assembly **100**. In this embodiment, the outer catheter **101** is a generally cylindrical elongated tube **101***b*. The outer catheter **101** allows the inner catheter **102** to be inserted and guided through the outer catheter **101** to facilitate accurate positioning and engagement of the second flexible distal end **102***d* of the inner catheter **102** within an inner cavity of the patient's anatomy.

[0023] FIG. **2**B exemplarily illustrates a perspective view of another embodiment of the outer catheter **101** of the catheter assembly **100**. In this embodiment, the outer catheter **101** comprises a first generally cylindrical elongated tube **101***b* and a second section **101***d* angled at a point along the longitudinal axis **104** of the first generally cylindrical elongated tube **101***b*. The second angled section **101***d* of the outer catheter **101** facilitates guiding of the inner catheter **102** into the inner cavity of the patient's anatomy.

[0024] FIG. **3** exemplarily illustrates the inner catheter **102** of the catheter assembly **100**. The inner catheter **102** is generally coaxial with the outer catheter **101** when the inner catheter **102** is inserted into the outer catheter **101**. The inner catheter **102** of the catheter assembly **100** is one of different shapes and sizes with one of different diameters and lengths. The second flexible distal end **102***d* of the inner catheter **102** is one of different shapes and sizes. The second flexible distal end **102***d* of the inner catheter **102** is made of a soft, biocompatible, and deformable polymer for enhancing flexibility of

the inner catheter **102** to facilitate easier insertion and navigation through the outer catheter **101** and also through the opening or cavity in the patient's anatomy. The second flexible distal end **102***d* of the inner catheter **102** is inserted into the outer catheter **101** from the first frontal end **101***a* of the outer catheter **101**, through the generally cylindrical elongated tube **101***b* of the outer catheter **101** and out the first distal end **101***c* of the outer catheter **101** for enabling the inner catheter **102** to engage the inner cavity of the patient's anatomy.

[0025] The inner catheter **102** comprises a first generally cylindrical elongated tube **102***b* and a second flexible section **102***c* that is configured and shaped to allow the inner catheter **102** to navigate to the inner cavity in the patient's anatomy as exemplarily illustrated in FIG. **3**. As used herein, the second flexible section **102***c* refers to a section of the inner catheter **102** that can be bent into different shapes to facilitate accurate guiding of the second flexible distal end **102***d* of the inner catheter **102** into the inner cavity of a patient's anatomy. The second flexible distal end **102***d* of the second flexible section **102***c* is configurable to engage with the inner cavity of the patient. The second flexible section **102***c* of the inserted inner catheter **102** extends beyond the first distal end **101***c* of the outer catheter **101** when the inner catheter **102** is inserted into the outer catheter **101** and guided into the inner cavity of the patient's anatomy.

[0026] The inserted inner catheter **102** accommodates one or more surgical instruments, for example, stents and wires, and materials, for example, dyes that are inserted into the inner catheter **102** through the second frontal end **102***a*. In an embodiment, the opening at the second flexible distal end **102***d* of the inner catheter **102** is made of a deformable material to allow the shape of the second flexible distal end **102***d* of the inner catheter **102** to be configured or adjusted to accommodate stents, wires, dyes and the like and/or for insertion of such materials into the desired inner cavity in the anatomy of the patient's body. In an embodiment, the inner catheter **102** is made of a less rigid material than the outer catheter **101**, and can be configured and manipulated into multiple angles and be rotated up to 360 degrees and be moved inwards and outwards inside the outer catheter **101**.

[0027] The inner catheter **102** is secured to the outer catheter **101** using a locking element **103**, for example, a locking diaphragm **103***a*, a clamp-type band, an adapter, etc. when the second flexible distal end **102***d* of the inner catheter **102** engages the inner cavity in the anatomy where the second flexible distal end **102***d* is to be inserted. The locking element **103** is a clamp-type band that is provided at the first frontal end **101***a* of the outer catheter **101** and attached around the inner catheter **102** to secure the inserted inner catheter **102** to the outer catheter **101**. When secured, there is no relative movement of the inner catheter **102** with respect to the outer catheter **101** about the locking element **103**. When the inner catheter **102** of the inner catheter-outer catheter assembly **100** reaches the desired location of the patient's inner cavity, the locking element **103** is tightened around the catheter assembly **100** to secure the inserted inner catheter **102** to the outer catheter **101**.

[0028] In an embodiment, the locking element **103** comprises, for example, a locking diaphragm **103***a* as illustrated in FIGS. **1**A-**1**B and FIGS. **2**A-**2**B. The locking diaphragm **103***a* is provided at the first frontal end **101***a* of the outer catheter **101** for securing the inserted inner catheter **102** to the outer catheter **101**. The locking diaphragm **103***a* is made of an elastic material that secures the inner catheter **102** to the outer catheter **101**.

[0029] FIG. **4** illustrates a method of performing a medical procedure on a patient by a medical practitioner using a catheter assembly **100**. An outer catheter **101** of one of multiple shapes and sizes with one of multiple diameters and lengths as disclosed in the detailed description of FIGS. **2**A-**2**B is provided **401**. The outer catheter **101** comprises a first frontal end **101***a* and a first distal end **101***c*. An inner catheter **102** of one of multiple shapes and sizes with one of multiple diameters and lengths as disclosed in the detailed description of FIG. **3** is provided **402**. The inner catheter **102** comprises a second frontal end **102***a* and a second flexible distal end **102***d*. The inner catheter **102** is generally coaxial with the outer catheter **101**. The inner catheter **102** further comprises a first generally cylindrical elongated tube **102***b* and a second flexible section **102***c* angled at a point with respect to the longitudinal axis **104** of the outer catheter **101** and thereafter angled again at one or more points along the axis of the inner catheter **102** as required for the medical procedure.

[0030] The second flexible section **102***c* of the inserted inner catheter **102** is made of a soft, biocompatible and deformable polymer and conforms to the shape and form of an inner cavity of the patient. A vascular system of a patient is accessed using a needle (not shown) and a small fixed plastic tube (not shown), herein referred to as a "sheath", is inserted into the vascular system of the patient. As used herein, the sheath refers to a fixed plastic tube used routinely in angiographic procedures. The first distal end **101***c* of the outer catheter **101** is inserted **403** into the vascular system of the patient's anatomy through the sheath.

[0031] The second flexible distal end **102***d* of the inner catheter **102** is inserted **404** into the outer catheter **101** from the first frontal end **101***a* of the outer catheter **101** to create a single catheter assembly **100**. The inner catheter **102** is navigated **405** through the outer catheter **101** till the second flexible distal end **102***d* of the navigated inner catheter **102** emerges from the first distal end **101***c* of the outer catheter **101** and reaches a predetermined location inside the patient's anatomy. The second flexible section **102***c* of the inserted inner catheter **102** extends beyond the first distal end **101***c* of the outer catheter **101**. The navigated inner catheter **102** is rotated **406** inside the outer catheter **101** to insert the second flexible distal end **102***d* of the navigated inner catheter **102** into the inner cavity within the vascular system at the predetermined location. The rotated inner catheter **102** is then secured **407** to the outer catheter **101** by a locking element **103** as exemplarily illustrated in FIGS. **1**A-**1**B and FIGS. **2**A-**2**B. One or more surgical instruments and materials are inserted through the second frontal end **102***a* of the secured inner catheter **102**, to enable the medical practitioner to perform the medical procedure on the anatomy of the patient using the catheter assembly **100**.

[0032] The catheter assembly **100** is configured and manipulated into different shapes and angles to fit multiple anatomies and multiple inner cavities of the anatomy for enabling the medical practitioner to perform multiple medical procedures, for example, cardiac surgery or surgery on any vascular system under diverse medical specialties and disciplines to perform diagnostic or therapeutic procedures.

[0033] Consider an example of performing a medical procedure using the catheter assembly **100**. An outer catheter **101**

as exemplarily illustrated in FIG. **2**A is provided. An inner catheter **102** as exemplarily illustrated in FIG. **3** is provided. The medical practitioner accesses the vascular system of a patient using a needle. The medical practitioner then inserts the sheath through the access into the vascular system of the patient. The medical practitioner then inserts the first distal end **101***c* of the outer catheter **101** through the sheath over a flexible wire, for example, a guide wire (not shown). As used herein, the guide wire refers to a wire that is routinely used in angiographic procedures and removed after the desired location of the inner catheter **102** is achieved. The medical practitioner then inserts the second flexible distal end **102***d* of the inner catheter **102** into the outer catheter **101** from the first frontal end **101***a* of the outer catheter **101**. The medical practitioner navigates the inserted inner catheter **102** through the outer catheter **101** till the second flexible distal end **102***d* of the navigated inner catheter **102** emerges from the first distal end **101***c* of the outer catheter **101** and reaches the desired location in the patient's body, for example, the root of the aorta of the patient. The navigated inner catheter **102** is rotated inside the inserted outer catheter **101** to enable insertion of the second flexible distal end **102***d* of the navigated inner catheter **102** into the inner cavity of the aorta of the patient. At this point the guide wire is removed. The rotated inner catheter **102** is secured to the outer catheter **101** by the locking element **103** comprising, for example, the locking diaphragm **103***a*. The rotated inner catheter **102** engages the origins of the left main and right coronary arteries. The medical practitioner then inserts one or more cardiac surgical instruments and materials through the second frontal end **102***a* of the secured inner catheter **102** to perform the cardiac procedure on the patient. The catheter assembly **100** is used for performing similar procedures, for example, angiography and intervention of peripheral arteries, for example, lower extremity arteries, carotid arteries, renal arteries or other blood vessels.

[0034] The catheter assembly **100** and the method for performing a medical procedure using the catheter assembly **100** disclosed herein enables the movement and adjustment of the inner catheter **102** at the point where the medical procedure is performed for different anatomies, for example, coronary arteries that are of different shapes and forms due to genetic and individual variations, in cases of tortuosity of the aorta and of saphenous vein grafts, resulting in substantial saving of time and cost. In diagnostic procedures, the catheter assembly **100** disclosed herein reduces the amount of contrast media used, thereby reducing wastage of the media.

[0035] The catheter assembly **100** allows a single catheter assembly to be used for multiple procedures by changing the shape of the outer catheter **101** or the opening of the inner catheter **102**. The catheter assembly **100** also provides cost savings by way of lower inventory. The catheter assembly **100** further reduces the amount of contrast media used and also reduces the radiation employed, by reducing the exposure time required in taking an in-dwelling catheter out of the anatomy of a patient and then advancing and trying other catheter or catheters.

[0036] The foregoing examples have been provided merely for the purpose of explanation and in no way are to be construed as limiting of the present invention. While the invention has been described with reference to various embodiments, it is understood that the words, which have been used herein, are words of description and illustration, rather than words of limitation. Additionally, although the invention has been described herein with reference to particular means, materials and embodiments, the invention is not intended to be limited to the particulars disclosed herein; rather, the invention extends to all functionally equivalent structures, methods and uses, such as are within the scope of the appended claims. It will be appreciated by those skilled in the art, having the benefit of the teachings of this specification, that changes could be made to the embodiments described above without departing from the broad inventive concept thereof. It is understood, therefore, that this invention is not limited to the particular embodiments disclosed, but it is intended to cover modifications within the spirit and scope of the present invention as defined by the appended claims.

I claim:

1. A catheter assembly configurable to multiple shapes, comprising:

a detachable, interchangeable and configurable outer catheter comprising a first frontal end and a first distal end, wherein shape of said outer catheter is configured to facilitate guiding of a detachable, interchangeable and flexible inner catheter into an inner cavity of an anatomy of a patient;

said detachable, interchangeable and flexible inner catheter comprising a second frontal end and a second flexible distal end, said inner catheter generally coaxial with said outer catheter, wherein said second flexible distal end of said inner catheter enables said inner catheter to engage said inner cavity of said anatomy of said patient; and

a locking element for securing said inner catheter to said outer catheter when said second flexible distal end of said inner catheter engages said inner cavity of said anatomy of said patient to allow one of equipment and material to be introduced into said inner cavity;

whereby said catheter assembly is configured and manipulated to fit multiple anatomies and multiple inner cavities of said multiple anatomies for enabling a medical practitioner to perform a plurality of medical procedures for a plurality of medical specialties and disciplines.

2. The catheter assembly of claim **1**, wherein said outer catheter is a generally cylindrical elongated tube.

3. The catheter assembly of claim **1**, wherein said outer catheter comprises a first generally cylindrical elongated tube and a second section angled at a point along the longitudinal axis of said first generally cylindrical elongated tube, wherein said second angled section of said outer catheter facilitates guiding of said inner catheter into said inner cavity of said anatomy of said patient.

4. The catheter assembly of claim **1**, wherein said outer catheter is one of a plurality of shapes and sizes with one of a plurality of diameters and lengths.

5. The catheter assembly of claim **1**, wherein said inner catheter comprises a first generally cylindrical elongated tube and a second flexible section, wherein said second flexible distal end of said second flexible section is configurable to engage with said inner cavity of said patient, wherein said second flexible section of said inner catheter extends beyond said first distal end of said outer catheter.

6. The catheter assembly of claim **1**, wherein said inner catheter is one of a plurality of shapes and sizes with one of a plurality of diameters and lengths.

7. The catheter assembly of claim **1**, wherein said inner catheter accommodates one or more of a plurality of surgical instruments and materials inserted through said second frontal end of said inner catheter.

8. The catheter assembly of claim **1**, wherein said second flexible distal end of said inner catheter is one of a plurality of shapes and sizes.

9. The catheter assembly of claim **1**, wherein said locking element comprises a locking diaphragm provided at said first frontal end of said outer catheter for securing said inner catheter to said outer catheter.

10. The catheter assembly of claim **1**, wherein said outer catheter and said inner catheter are made of a biocompatible flexible polymer.

11. The catheter assembly of claim **1**, wherein said second flexible distal end of said inner catheter is made of a soft, biocompatible, and deformable polymer.

12. A method of performing a medical procedure on a patient by a medical practitioner using a catheter assembly, comprising:

providing said catheter assembly comprising:

a detachable, interchangeable and configurable outer catheter of one of a plurality of shapes and sizes with one of a plurality of diameters and lengths, comprising a first frontal end and a first distal end, wherein shape of said outer catheter is configured to facilitate guiding of a detachable, interchangeable and flexible inner catheter into an inner cavity of an anatomy of a patient;

said detachable, interchangeable and flexible inner catheter of one of a plurality of shapes and sizes with one of a plurality of diameters and lengths, comprising a second frontal end and a second flexible distal end, said inner catheter generally coaxial with said outer catheter, wherein said second flexible distal end of said inner catheter enables said inner catheter to engage said inner cavity of said anatomy of said patient; and

a locking element for securing said inner catheter to said outer catheter when said second flexible distal end of said inner catheter engages said inner cavity of said anatomy of said patient to allow one of equipment and material to be introduced into said inner cavity;

inserting said first distal end of said outer catheter into a vascular system of said anatomy of said patient through a sheath inserted into said vascular system using a needle;

inserting said second flexible distal end of said inner catheter into said outer catheter from said first frontal end of said outer catheter;

navigating said inner catheter through said outer catheter till said second flexible distal end of said navigated inner catheter emerges from said first distal end of said outer catheter and reaches a predetermined location;

rotating said navigated inner catheter inside said outer catheter to insert said second flexible distal end of said navigated inner catheter into an inner cavity within said vascular system at said predetermined location; and

securing said rotated inner catheter to said outer catheter by said locking element;

whereby said catheter assembly configured and manipulated to fit multiple anatomies and multiple inner cavities of said multiple anatomies enables said medical practitioner to perform said medical procedure on said anatomy of said patient.

13. The method of claim **12**, wherein said outer catheter comprises a first generally cylindrical elongated tube and a second section angled at a point along the longitudinal axis of said first generally cylindrical elongated tube, wherein said second angled section of said outer catheter facilitates guiding of said inner catheter into said inner cavity of said anatomy of said patient.

14. The method of claim **12**, wherein said inner catheter comprises a first generally cylindrical elongated tube and a second flexible section, wherein said second flexible distal end of said second flexible section is configurable to engage with said inner cavity of said patient, wherein said second flexible section of said inner catheter extends beyond said first distal end of said outer catheter.

15. The method of claim **12**, wherein said outer catheter and said inner catheter are made of a biocompatible flexible polymer.

16. The method of claim **12**, wherein said second flexible distal end of said inner catheter is made of a soft, biocompatible and deformable polymer for conforming to shape and form of said inner cavity of said patient.

* * * * *