US010953283B2

(12) **United States Patent**
Huber

(10) **Patent No.: US 10,953,283 B2**
(45) **Date of Patent: Mar. 23, 2021**

(54) **BASE APPARATUS FOR ROTATING A FITNESS BALANCE DEVICE**

(71) Applicant: **Wendy Lynn Huber**, San Jose, CA (US)

(72) Inventor: **Wendy Lynn Huber**, San Jose, CA (US)

(73) Assignee: **CENTER STRENGTH PILATES, LLC**, San Jose, CA (US)

(*) Notice: Subject to any disclaimer, the term of this patent is extended or adjusted under 35 U.S.C. 154(b) by 25 days.

(21) Appl. No.: **16/362,689**

(22) Filed: **Mar. 25, 2019**

(65) **Prior Publication Data**

US 2019/0290967 A1 Sep. 26, 2019

Related U.S. Application Data

(60) Provisional application No. 62/646,927, filed on Mar. 23, 2018.

(51) **Int. Cl.**
A63B 26/00 (2006.01)
A63B 21/00 (2006.01)
A63B 41/00 (2006.01)

(52) **U.S. Cl.**
CPC ***A63B 26/003*** (2013.01); ***A63B 21/4035*** (2015.10); *A63B 41/00* (2013.01)

(58) **Field of Classification Search**
CPC A63B 26/003; A63B 21/4035; A63B 2225/62; A63B 2210/50; A63B 2225/093; A63B 2209/00; A63B 2225/055; A63B 1/00; A63B 22/16; A63B 22/18–20; A63B 2022/185; A63B 41/00–085
See application file for complete search history.

(56) **References Cited**

U.S. PATENT DOCUMENTS

2,351,293 A * 6/1944 Saunders A63B 22/14 482/147
3,512,774 A * 5/1970 Honer A63B 22/14 482/147
4,117,627 A * 10/1978 Slingerland, Jr. A47G 7/041 108/103
4,290,601 A * 9/1981 Mittelstadt A63B 22/18 472/14
5,683,337 A * 11/1997 Zetocha A63B 22/14 482/146

(Continued)

Primary Examiner — Andrew S Lo
(74) *Attorney, Agent, or Firm* — Ashok Tankha; Lipton Weinberger & Husick

(57) **ABSTRACT**

A base apparatus for accommodating and rotating a fitness balance device for a balance workout routine is provided. The base apparatus comprises a bottom member, a ball bearing plate, a top member, a fastening mechanism, and multiple ball bearings. The ball bearings are disposed in a circular track located on an upper surface of the bottom member. The ball bearing plate is disposed between the bottom member and the top member. Each peripheral hole in the ball bearing plate is configured to accommodate a ball bearing. The top member is in communication with and disposed above the ball bearing plate, and is slidably fastened to the bottom member by the fastening mechanism. The top member comprises a collar for accommodating the fitness balance device, and is configured to rotate relative to the bottom member with the movement of the ball bearings in the circular track of the bottom member.

15 Claims, 14 Drawing Sheets

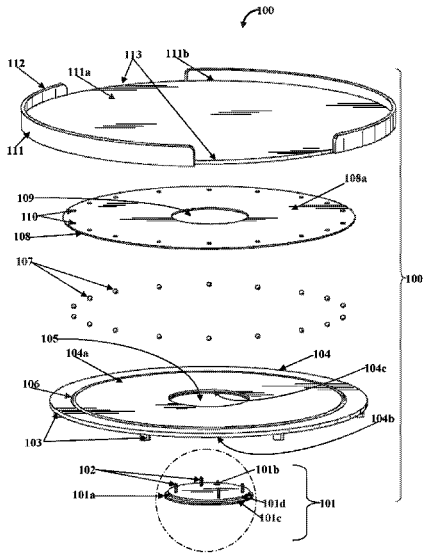

(56) **References Cited**

U.S. PATENT DOCUMENTS

7,553,267	B1 *	6/2009	Hauser	A63B 21/00047 482/141
8,814,768	B1 *	8/2014	Yang	A63B 23/1236 482/147
9,968,820	B2 *	5/2018	Stockhausen	A63B 21/4035
9,999,807	B2 *	6/2018	Rainey	A63B 22/16
10,279,213	B2 *	5/2019	Agostini	A63B 26/003
10,449,405	B2 *	10/2019	Endelman	A63B 22/14
2004/0142801	A1 *	7/2004	Lin	A63B 26/003 482/142
2010/0267533	A1 *	10/2010	Susnjara	A63B 22/20 482/142
2012/0277078	A1 *	11/2012	Seade	A63B 21/4049 482/142
2013/0123079	A1 *	5/2013	Peritz	A63B 23/1236 482/139
2013/0334846	A1 *	12/2013	Bahneman	A47C 9/00 297/195.11
2014/0155236	A1 *	6/2014	Curry	A63B 69/0093 482/146
2015/0011369	A1 *	1/2015	Peritz	A63B 21/4035 482/142
2016/0067541	A1 *	3/2016	Lopez	A63B 21/0618 482/124
2016/0250520	A1 *	9/2016	Rainey	A63B 26/003 482/146
2018/0117384	A1 *	5/2018	Endelman	A63B 71/0054
2019/0175983	A1 *	6/2019	Carr	A63B 21/04
2019/0232103	A1 *	8/2019	Agostini	A63B 21/4043
2019/0314676	A1 *	10/2019	Wilson	A63B 22/18

* cited by examiner

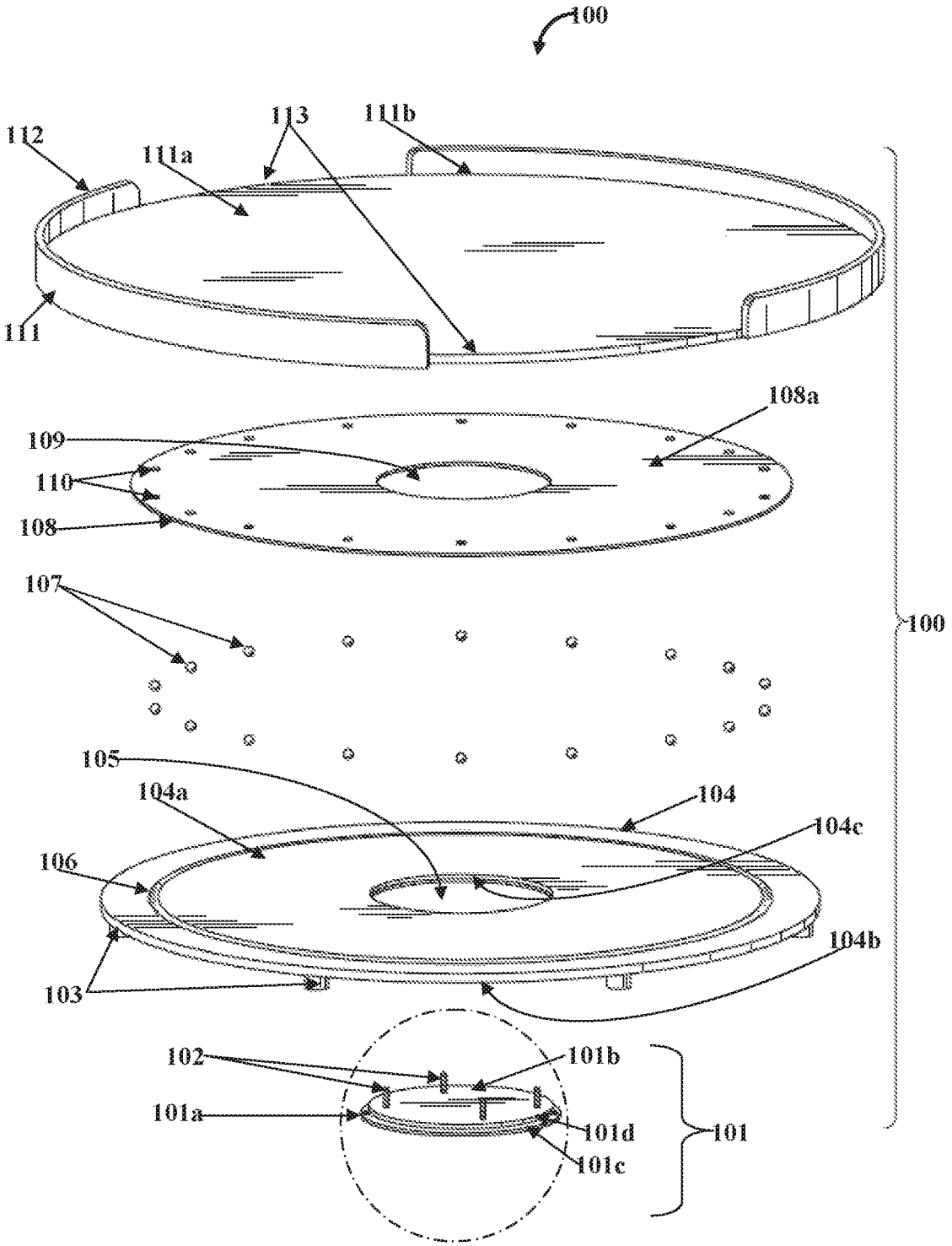
100
112
113
111b
111a
111
108a
109
110
108
107
100
105
104a
104
104c
106
104b
103
102
101b
101a
101d
101
101c

FIG. 1A

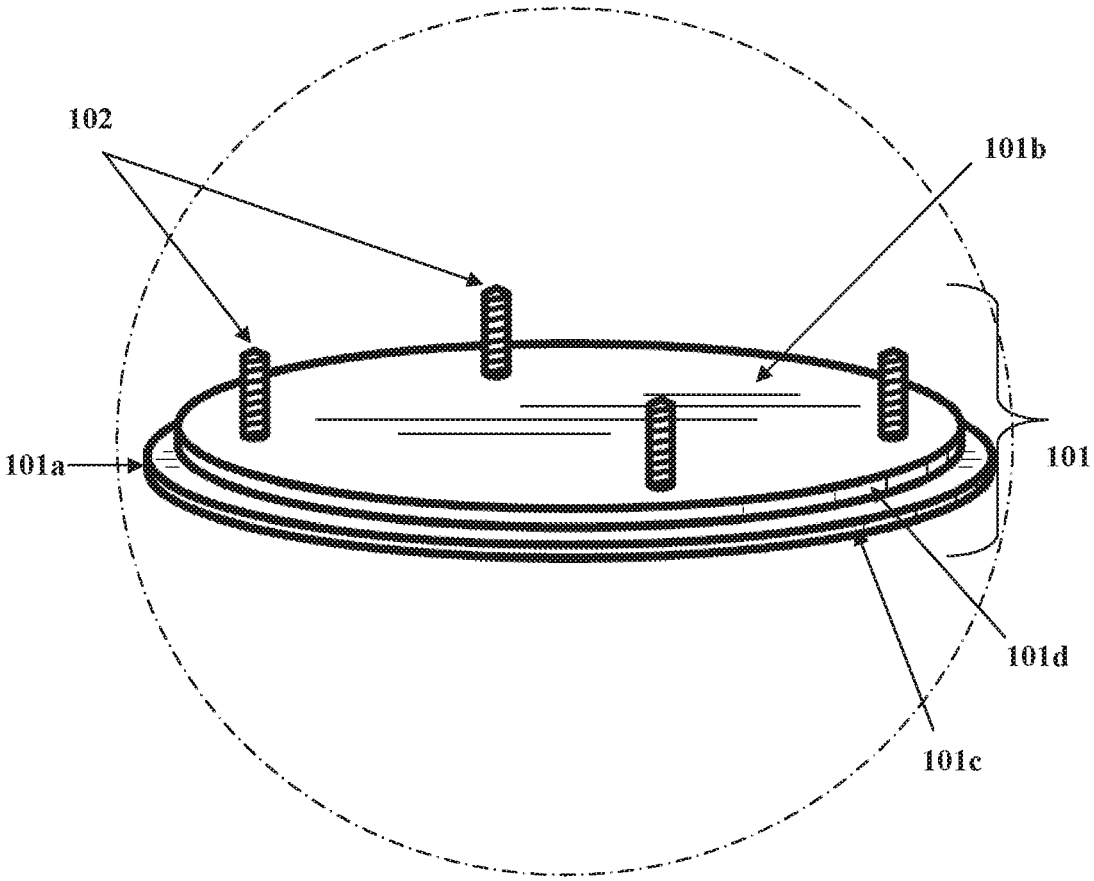

FIG. 1B

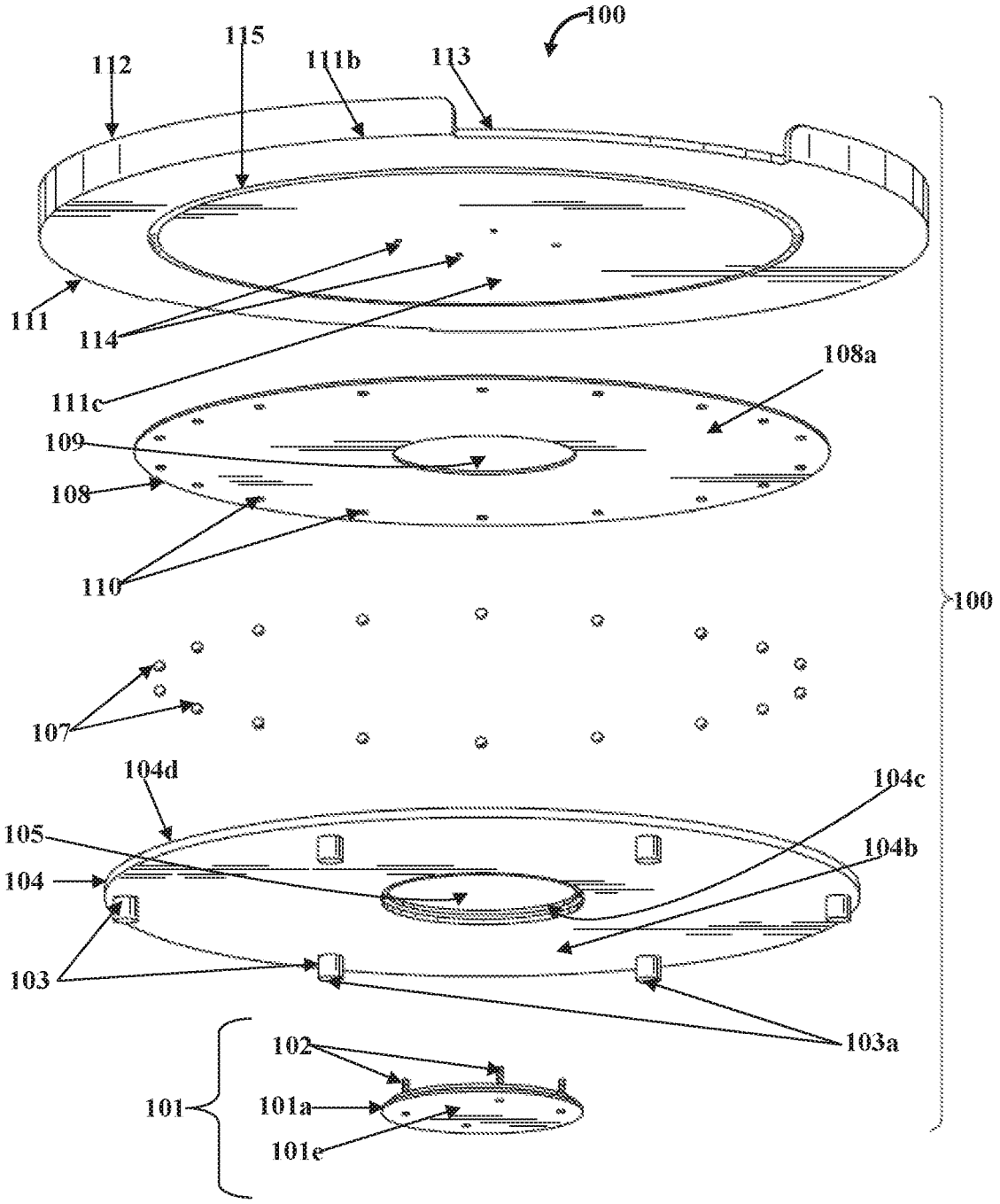
100
112
115
111b
113
111
114
111c
108a
109
108
110
100
107
104d
104c
105
104b
104
103
103a
102
101
101a
101e

FIG. 2

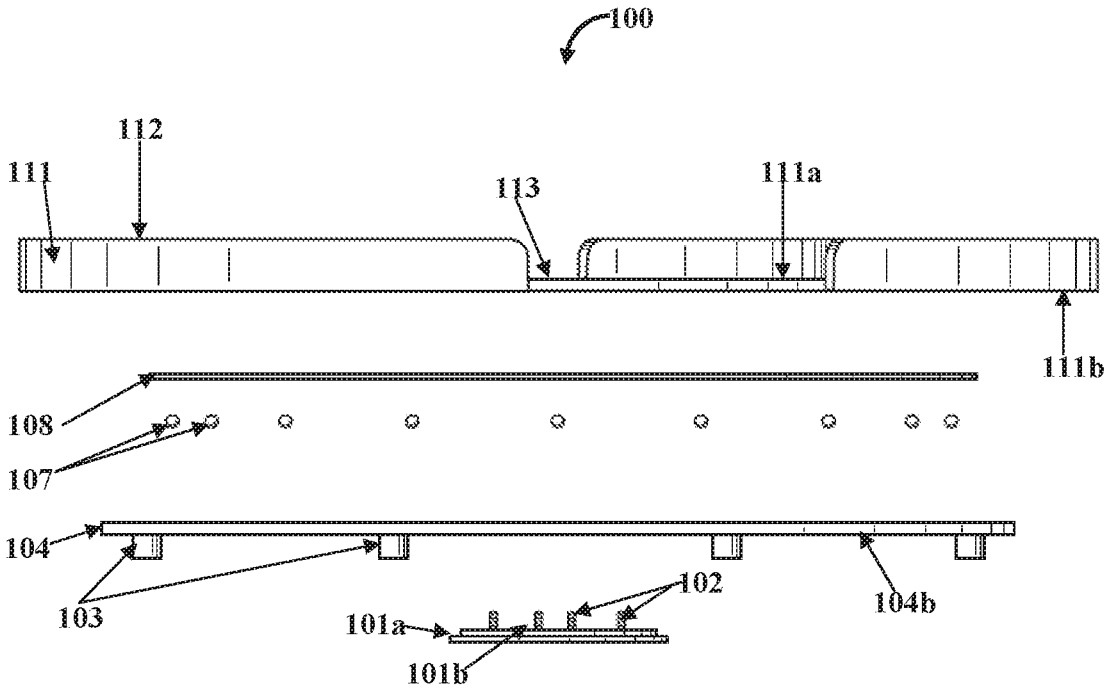

FIG. 3

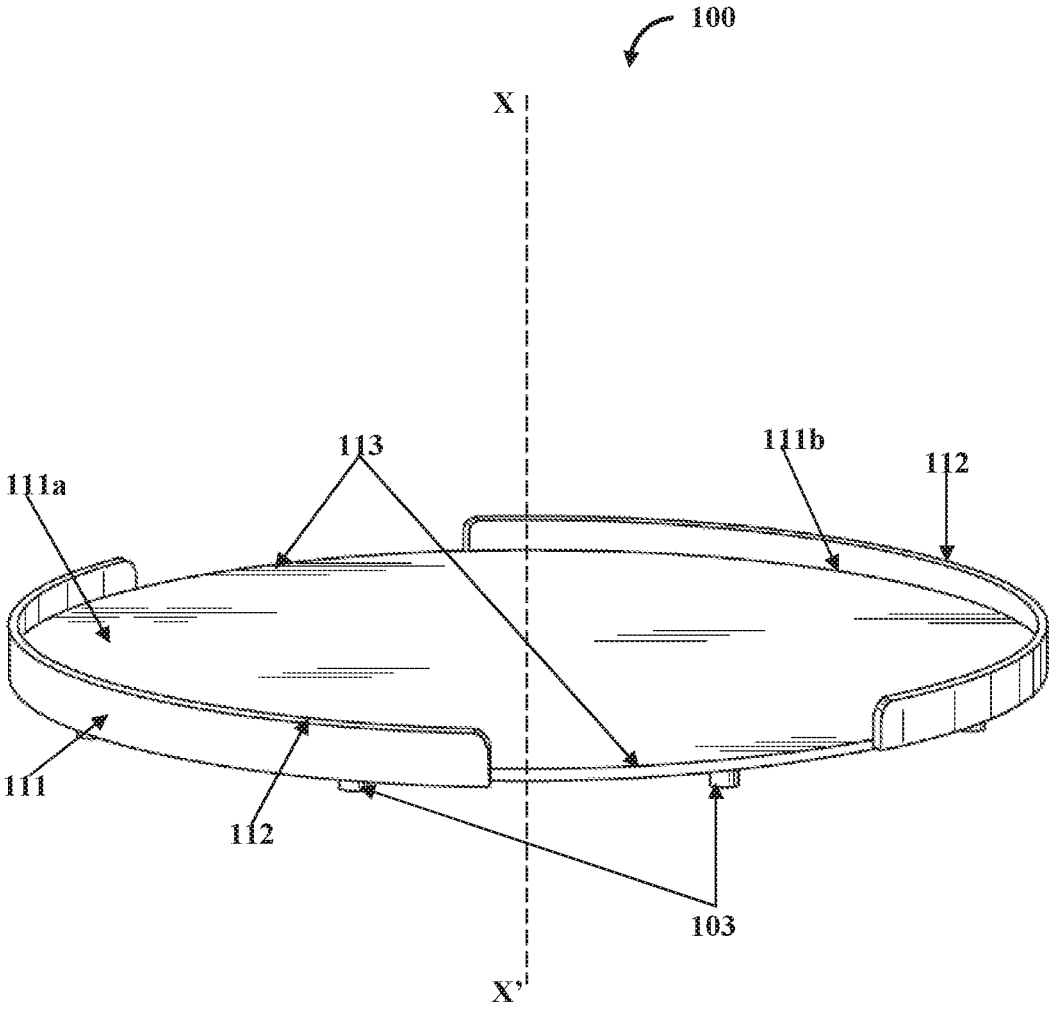

FIG. 4

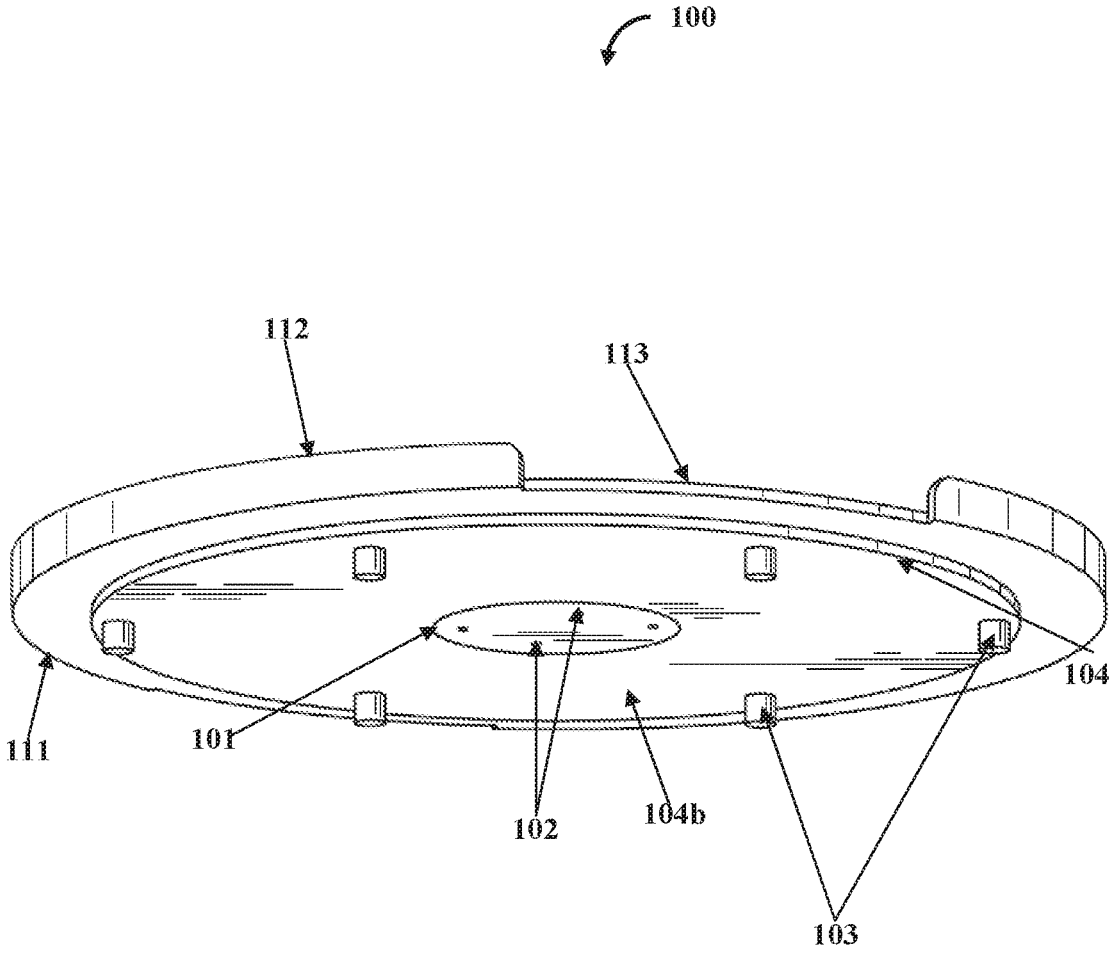

FIG. 5

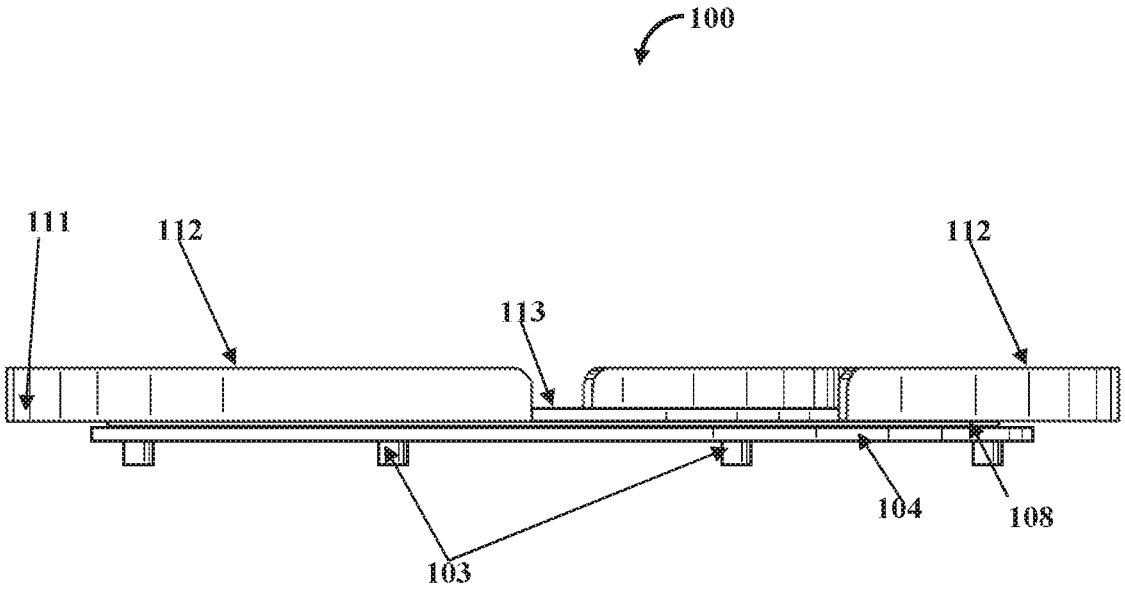

FIG. 6A

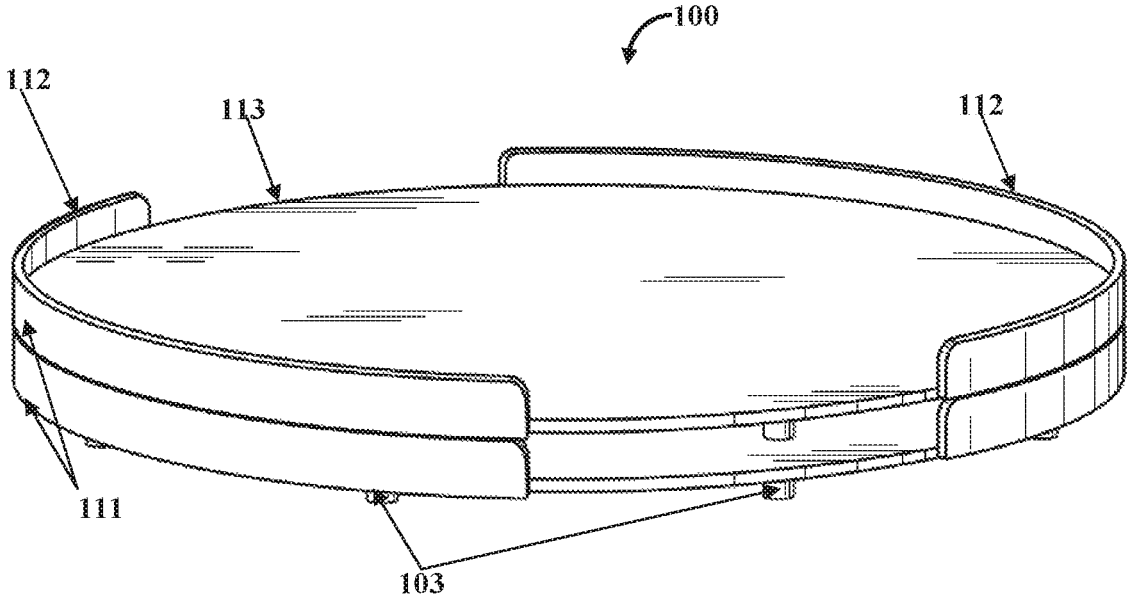

FIG. 6B

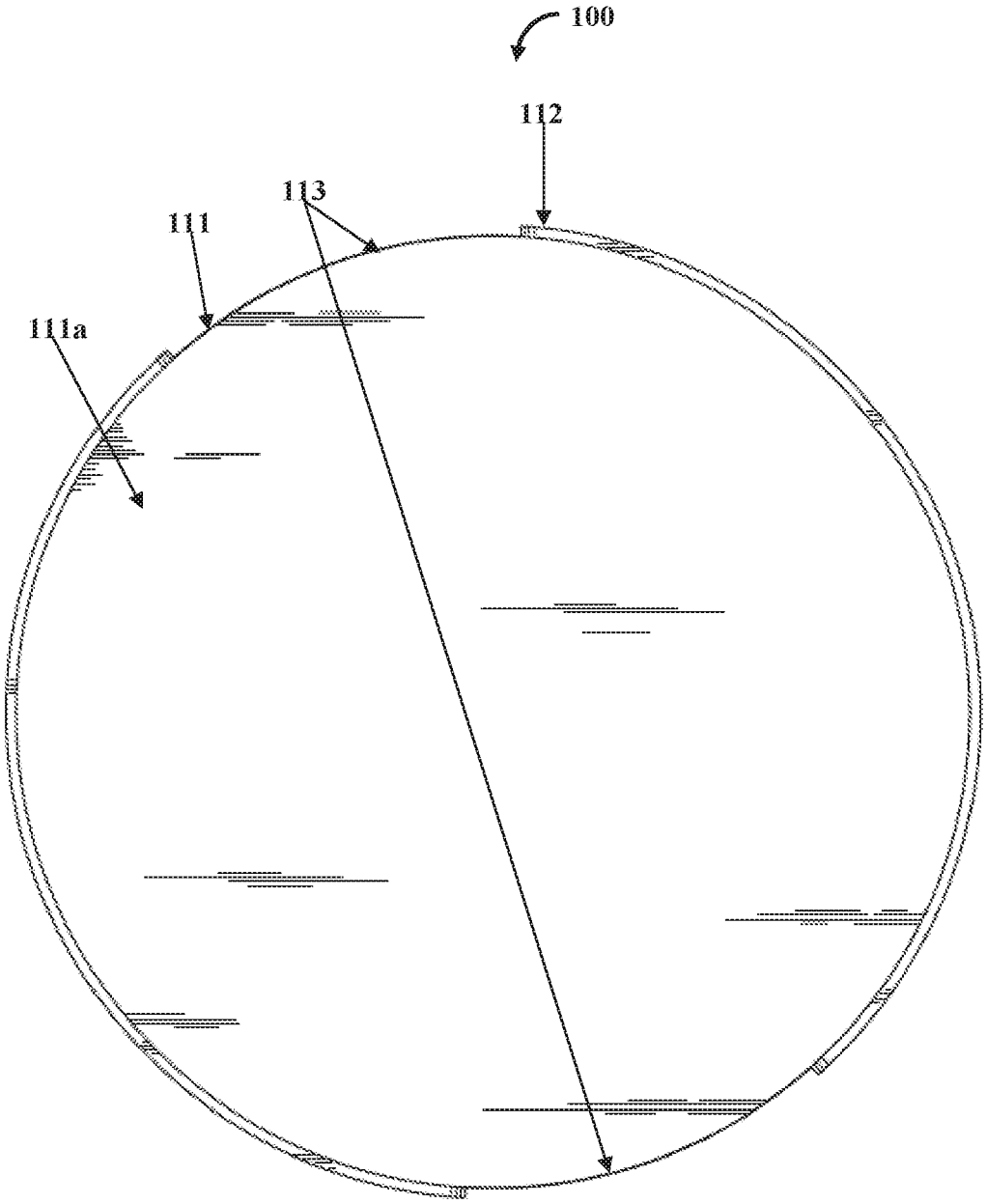

FIG. 7

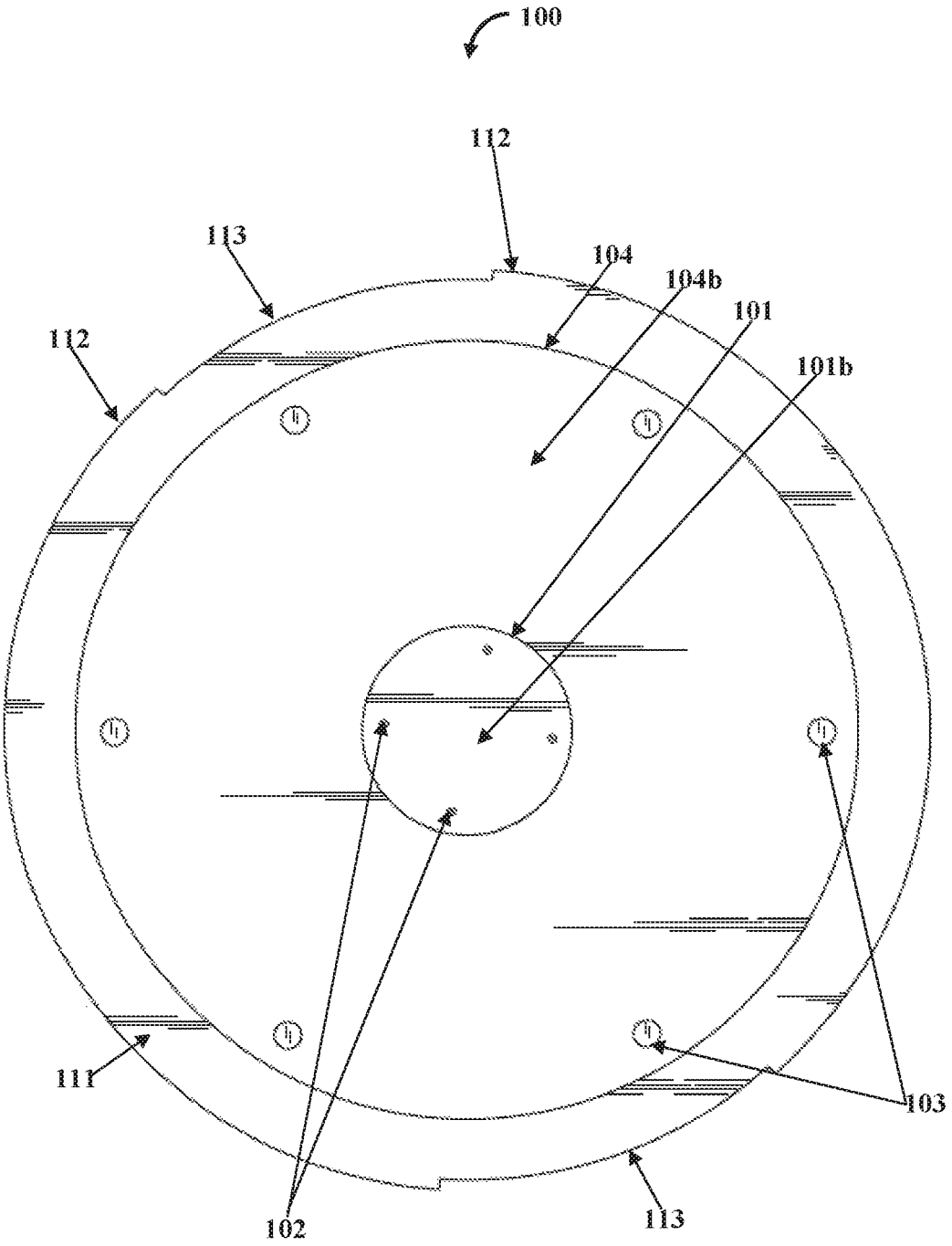

FIG. 8

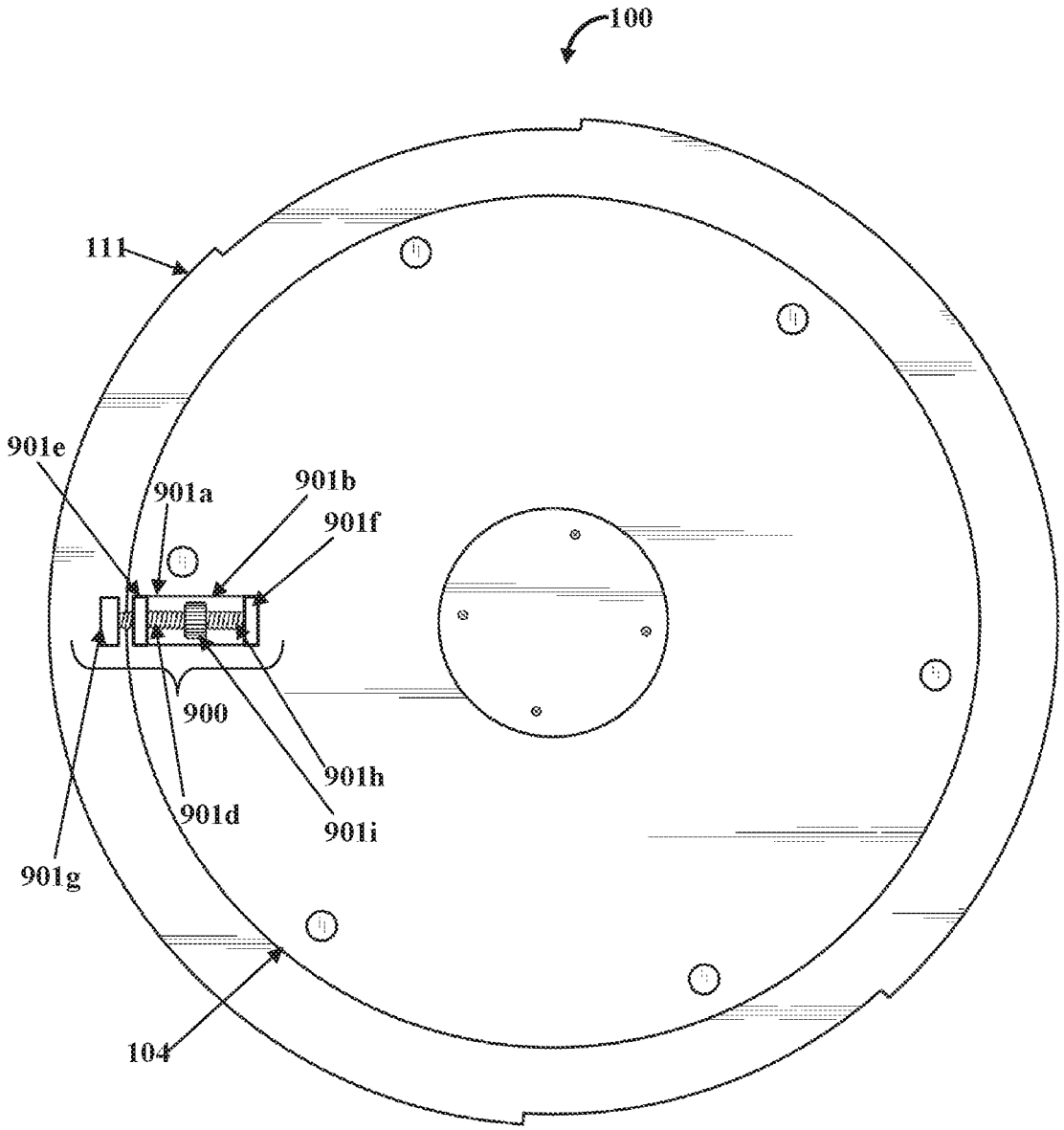

FIG. 9A

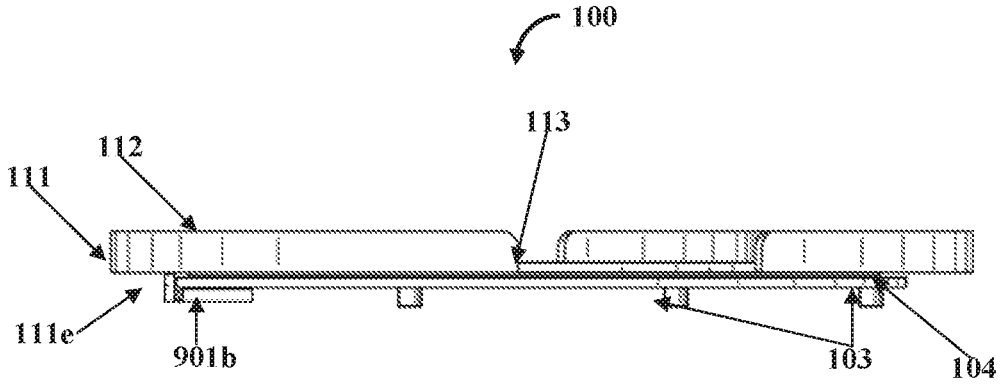

FIG. 9B

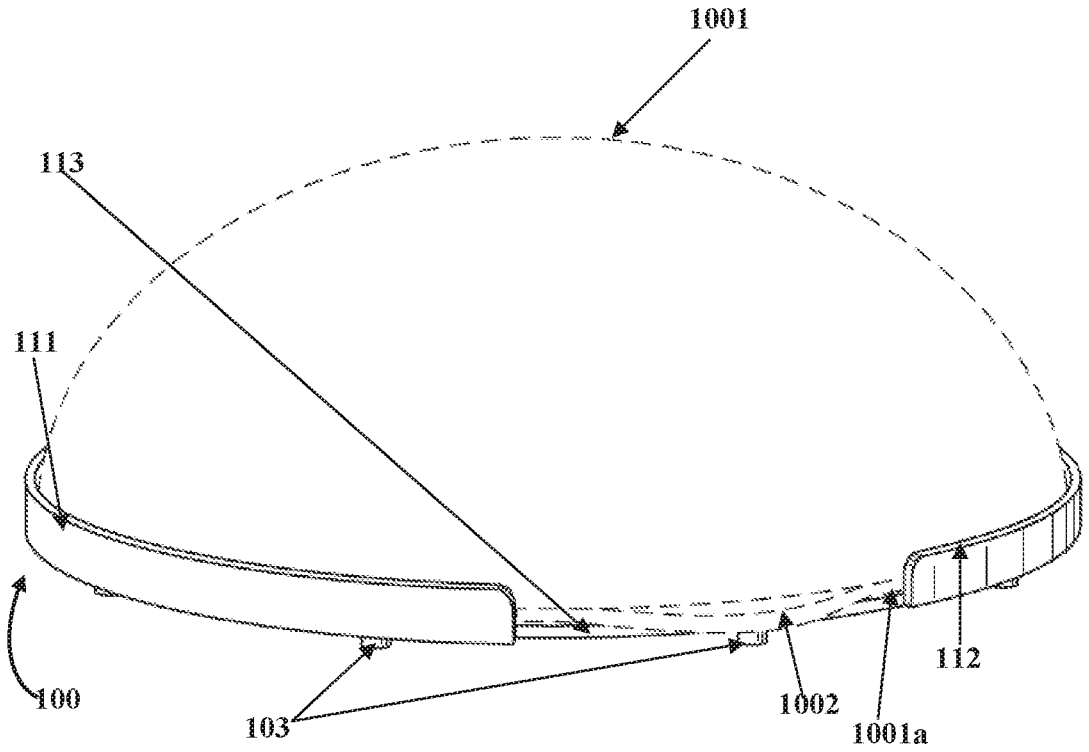

FIG. 10

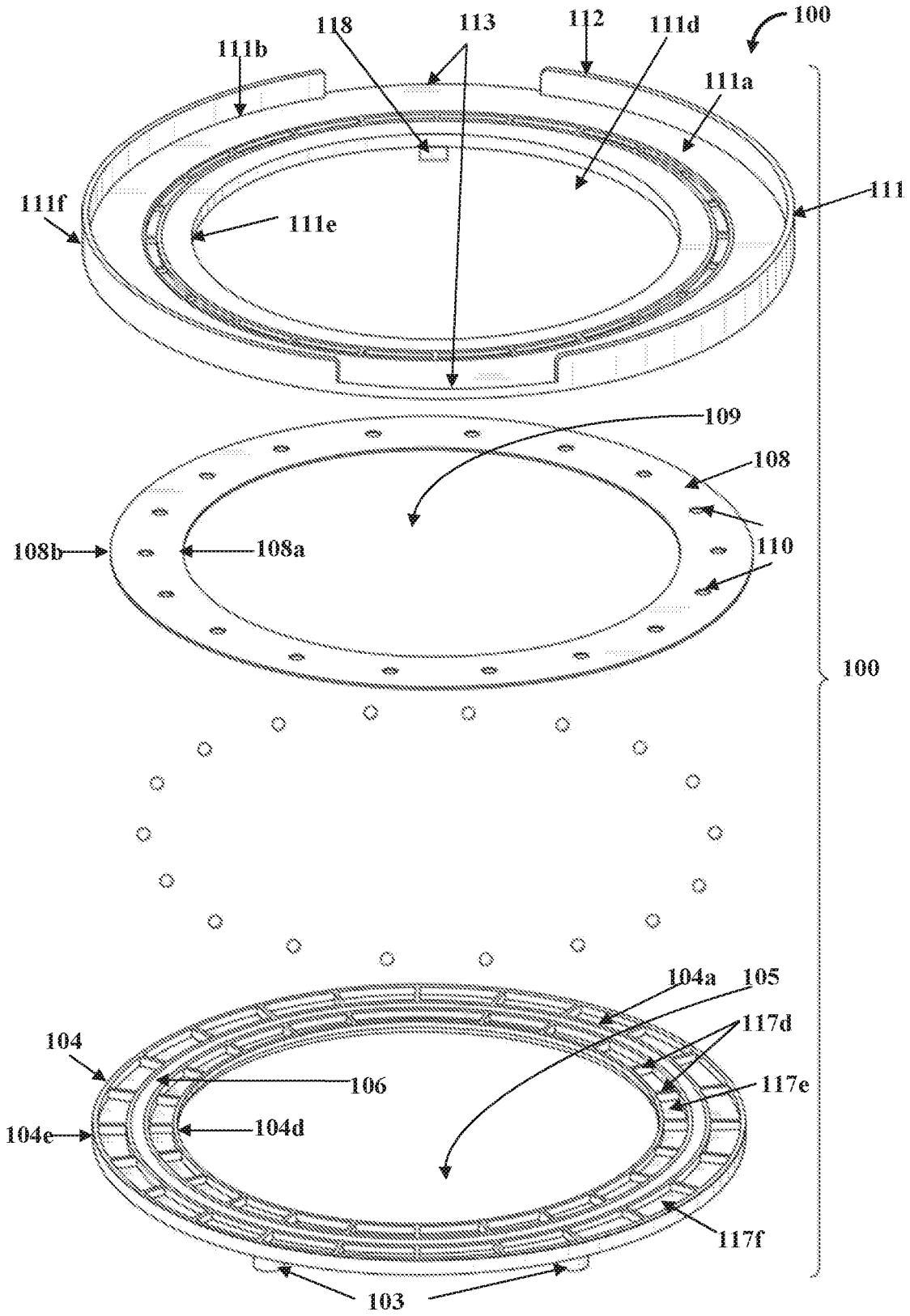
100
118
113
112
111d
111b
111a
111
111f
111e
109
108
108b
108a
110
100
104a
105
117d
104
106
117e
104e
104d
117f
103

FIG. 11A

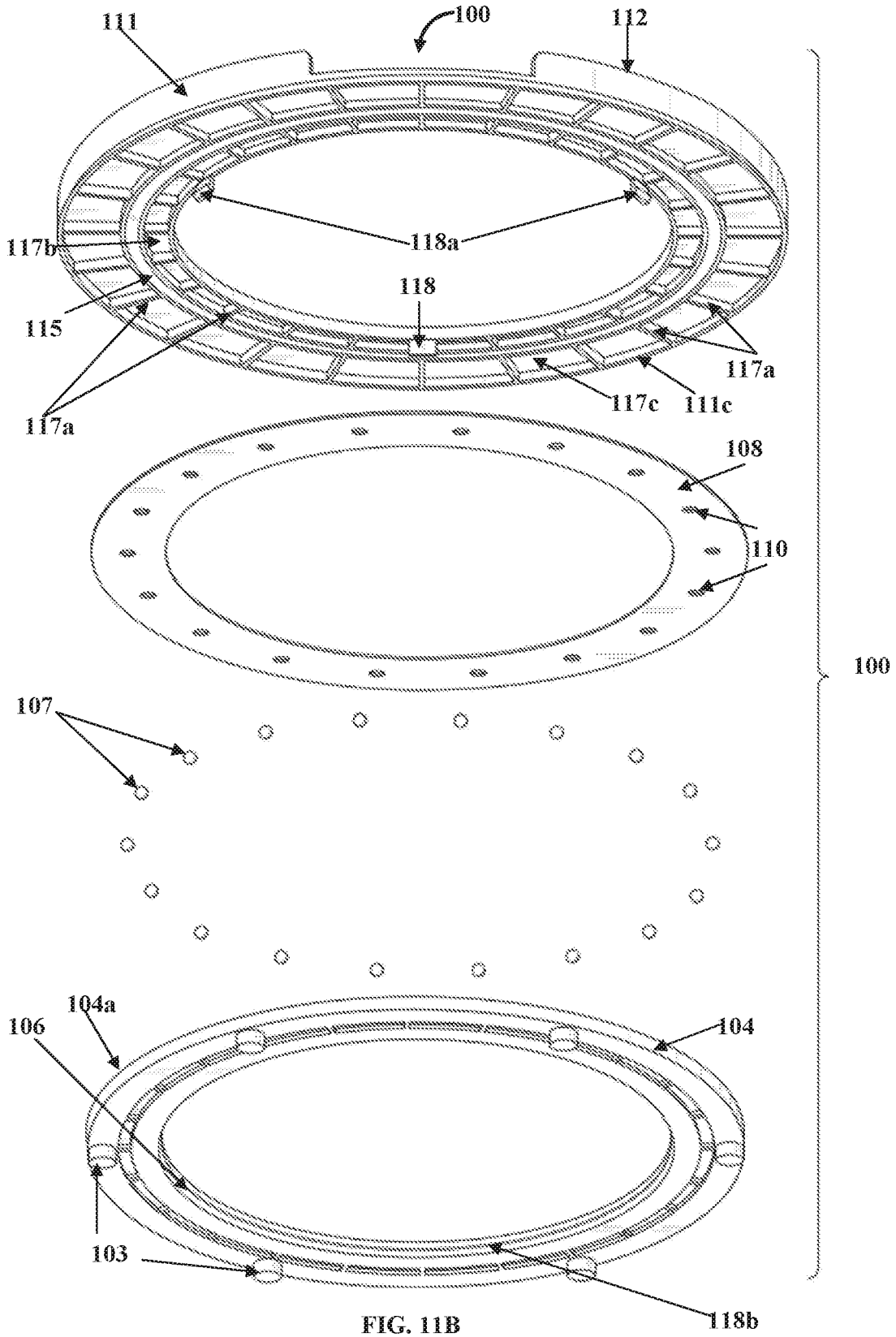
100
111
112
118a
117b
118
115
117a
117c
111c
117a
108
110
100
107
104a
106
104
103
118b

FIG. 11B

BASE APPARATUS FOR ROTATING A FITNESS BALANCE DEVICE

CROSS-REFERENCE TO RELATED APPLICATIONS

This application claims priority to and the benefit of provisional patent application titled "Base Apparatus For Rotating A Fitness Balance Device", application No. 62/646,927 filed in the United States Patent Office on Mar. 23, 2018. The specification of the above referenced patent application is incorporated herein by reference in its entirety.

BACKGROUND

The apparatus disclosed herein, in general, relates to fitness devices. More particularly, the apparatus disclosed herein relates to a fitness device attachment that provides additional functionality to a fitness device.

Regular exercise is important for maintaining a healthy life. It is well known that regular exercise helps in maintaining physical fitness, managing weight and improving intellectual functioning. However, a major challenge is that a user's body must be in contact with the floor or other hard surface for performing different forms and types of exercises. Extended periods of contact with hard surfaces, while performing exercises may cause joint pain for many people.

One way of reducing joint pain is by using a fitness ball for exercising. Fitness balls are known by a number of different names, for example, Swiss ball, exercise ball, gym ball, sports ball, fit ball, stability ball, therapy ball, yoga ball, balance ball, body ball, etc. These fitness balls are about 20 to about 30 inches in diameter and are constructed of an elastic material such as rubber or a polymer, and usually inflated with air. In addition for use in exercising, fitness balls are also used in physical therapy.

A major problem with the use of fitness balls for exercising is that users experience difficulty in maintaining their balance when they are on top of the fitness ball. For example, when the user uses a fitness ball for standing, sitting, or lying on top of the fitness ball, the user must continuously balance his body to compensate for the instability of the fitness ball. Therefore, the user must use more muscle movement than used in conventional exercises to maintain balance. Failure to continuously compensate for the instability of the fitness ball increases the chances of unexpected falls, slippage, etc., which in turn increases the risk of injury. Several alternative fitness devices have been introduced in market that attempt to overcome the disadvantages associated with the fitness ball. The Bosu® Balance Trainer of BOSU Fitness, LLC is an example of an alternative fitness device designed to overcome the disadvantages associated with a fitness ball. The Bosu® Balance Trainer, herein referred to as Bosu® ball, comprises an inflated rubber hemisphere attached to a rigid circular base. The Bosu® ball seeks to alleviate undue stress on the user's joints and muscles by reducing muscle movement necessary to maintain the user's balance while using the Bosu® ball. However, the Bosu® ball has certain limitations. For example, the Bosu® ball cannot be rotated when the Bosu® ball is placed on its rigid circular base, thereby preventing the use of Bosu® ball for exercises that require a user to twist his/her body and/or rotate the Bosu® ball.

Hence, there is a long felt yet unresolved need for an apparatus that provides additional functionality to a fitness device. More specifically, there is a long felt but unresolved need for an attachment for the Bosu® ball fitness device that allows a user to perform exercises involving twisting his/her body and/or rotating the Bosu® ball.

SUMMARY OF THE INVENTION

This summary is provided to introduce a selection of concepts in a simplified form that are further disclosed in the detailed description of the invention. This summary is not intended to determine the scope of the claimed subject matter.

A base apparatus for accommodating and rotating a fitness balance device for a balance workout routine is provided. The base apparatus disclosed herein comprises a bottom member for supporting the base apparatus. The bottom member comprises a circular track on an upper surface of the bottom member. The circular track comprises a plurality of ball bearings disposed in the circular track. The base apparatus further comprises a top member positioned above the ball bearing plate. The ball bearing plate is disposed between the top member and the bottom member. The ball bearing plate comprises peripheral holes for accommodating the ball bearings that are disposed in the circular track and which project above the circular track. The top member is disposed above the ball bearing plate, and is in communication with the ball bearing plate. The top member comprises a collar extending along a circumference of an upper surface of the top member for accommodating the fitness balance device on the upper surface of the top member. The base apparatus further comprises a fastening mechanism for slidably fastening the bottom member to the top member.

BRIEF DESCRIPTION OF THE DRAWINGS

The foregoing summary, as well as the following detailed description of the invention, is better understood when read in conjunction with the appended drawings. For the purpose of illustrating the invention, exemplary constructions of the invention are shown in the drawings. However, the invention is not limited to the specific methods and components disclosed herein. The description of a method step or a component referenced by a numeral in a drawing is applicable to the description of that method step or component shown by that same numeral in any subsequent drawing herein.

FIG. **1**A exemplarily illustrates an exploded, top perspective view of a base apparatus for accommodating and rotating a fitness balance device for a balance workout routine.

FIG. **1**B is an enlarged view of the circled portion shown in FIG. **1**A.

FIG. **2** exemplarily illustrates an exploded, bottom perspective view of the base apparatus.

FIG. **3** exemplarily illustrates an exploded, left side elevation view of the base apparatus.

FIG. **4** exemplarily illustrates an assembled, top perspective view of the base apparatus.

FIG. **5** exemplarily illustrates an assembled, bottom perspective view of the base apparatus.

FIG. **6**A exemplarily illustrates an assembled, left side elevation view of the base apparatus.

FIG. **6**B exemplarily illustrates a top perspective view of the base apparatus stacked on each other for storage purpose.

FIG. **7** exemplarily illustrates a top plan view of the base apparatus.

FIG. **8** exemplarily illustrates a bottom view of the base apparatus.

FIG. **9**A exemplarily illustrates a bottom view of the base apparatus showing a locking mechanism for locking the top member and the bottom member of the base apparatus.

FIG. **9**B exemplarily illustrates a front view of the base apparatus showing the locking mechanism.

FIG. **10** exemplarily illustrates a top perspective view of the base apparatus, showing a fitness balance device positioned on a top member of the base apparatus.

FIGS. **11**A-**11**B exemplarily illustrate an exploded top view and an exploded bottom view of an alternate embodiment of the base apparatus.

DETAILED DESCRIPTION OF THE INVENTION

FIGS. **1**A, **2**, and **3** exemplarily illustrate exploded views of a base apparatus **100** for accommodating and rotating a fitness balance device **1001** shown in FIG. **10**. The fitness balance device **1001** is, for example, a fitness training half ball or a hemispherical ball such as the BOSU® balance trainer or the BOSU® ball of BOSU Fitness, LLC, as exemplarily illustrated in FIG. **10**. The fitness balance device **1001** is used for a balanced workout routine.

FIG. **1**A exemplarily illustrates an exploded, top perspective view of a base apparatus **100** for accommodating and rotating a fitness balance device **1001** for a balance workout routine. The base apparatus **100** disclosed herein comprises a bottom member **104** for supporting the base apparatus **100**, a ball bearing plate **108** disposed between the top member **111** and the bottom member **104**, a circular track **106** disposed on an upper surface **104***a* of the bottom member **104**, ball bearings **107** disposed in the circular track **106**, and a fastening mechanism **101**. The ball bearing plate **108** is disposed between the top member **111** and the bottom member **104**. The lower surface **108***b* of the ball bearing plate **108** frictionally engages the upper surface **104***a* of the bottom member **104**. In an embodiment, the upper surface **108***a* of the ball bearing plate **108** frictionally engages the lower surface **111***c* of the top member **111**. In another embodiment, the upper surface **108***a* of the ball bearing plate **108** is disposed on top of the upper surface **104***a* of the bottom member **104** and disposed at a distance from the lower surface **111***c* of the top member **111**. The ball bearing plate **108** comprises a central opening **109**, and peripheral holes **110** disposed along the periphery of the ball bearing plate **108**. The ball bearings **107** are disposed in the circular track **106** and project above the circular track **106**. The portion of the ball bearings **107** that project above the circular track **106** are accommodated in the peripheral holes **107** of the ball bearing plate **108**. The ball bearings **107** project through and out of the peripheral holes **110** to contact the circular track **106** on the upper surface **104***a* of the bottom member **104** and a circular track **115** on a lower surface **111***c* of the top member **111** as illustrated in FIGS. **1**A, **2**, **11**A, and **11**B. The peripheral holes **110** also serve the function of keeping the ball bearings **107** separated from one another and precludes the ball bearings **107** from clumping together when the ball bearings **107** rotate and/or move along the circular track **106**.

When a rotational force is applied by a user to the fitness balance device **1001**, the ball bearings **107** move along circular tracks **106** and **115** on the bottom member **104** and the top member **111**, respectively, and the ball bearing plate **108** rotates on the ball bearings **107** disposed in circular track **106**. There are about as many ball bearings **107** disposed in circular track **106** as the number of peripheral holes **110**.

In an embodiment, the thickness of the ball bearing plate **108** is about 0.125 inch. The top member **111** is disposed above the ball bearing plate **108**. The top member **111** comprises a collar **112** extending along a circumference **111***b* of an upper surface **111***a* of the top member **111** for accommodating the fitness balance device **1001** on the upper surface **111***a* of the top member **111**, as exemplarily illustrated in FIG. **10**. The fastening mechanism **101** slidably fastens the bottom member **104** to the top member **111**. The collar **112** of the top member **111** and wraps around the circumference **111***b* of the upper surface **111***a* of the top member **111**.

The number of holes in the ball bearing plate **108** is equal to the number of ball bearings **107**, as illustrated in FIGS. **1**A, **2**, **11**A, and **11**B. Each portion of the ball bearing **107** that projects above the circular track **106** is accommodated in one of the peripheral holes **110** in the ball bearing plate **108**. The diameter of the ball bearings **107** is more than the thickness of the ball bearing plate **108**. In an embodiment, the thickness of the ball bearing plate **108** is about 0.125 inch and the thickness of the ball bearings **107** is about 0.5 inch. The ball bearing plate **108** functions to separate the ball bearings **107** from each other such that the ball bearings **107** do not interfere with the movement of one another and do not lump together in the circular track **106**. In an embodiment, the peripheral hole **107** has a diameter of about 0.6 inch which allows free movement of the ball bearings **107** in the peripheral hole which have a diameter of about 0.5 inch. In an embodiment, the circular track **106** has a depth of about 0.25 inch. Therefore, in this embodiment, the ball bearings **107** when placed on the circular track **106**, project above the circular track **106** by about 0.25 inch. In an embodiment, when the ball bearing plate **108** of about 0.125 inch thickness is disposed on top of the bottom member **104** by accommodating the ball bearings **107** in the peripheral holes **110**, the ball bearings **107** project above the ball bearing plate **108** by about 0.125 inch. This 0.125 inch portion of the ball bearings is accommodated in the circular track **115** of the top member **111** which also has a depth of 0.25 inch. The ball bearing plate **108** rests on the bottom member **104** due to gravity. There is sufficient free play between the ball bearings **107** and the peripheral holes **110** of the ball bearing plate **108** which precludes the ball bearing plate **108** from sticking to the ball bearings **107**.

When a rotational force is applied by a user to a fitness balance device **1001** disposed on the upper surface **111***a* of the top member **111**, the rotational force is transmitted by the top member **111** to the upper surface **108***a* of the ball bearing plate **108**, which allows the ball bearing plate **108** to rotate in a clockwise or anti-clockwise direction in accordance with the direction of the rotational force applied by the rotation and/or linear movement of the ball bearings **107** along the circular track **106**, thereby allowing the rotation of the fitness balance device **1001**.

In an embodiment, the thickness of the ball bearings **107** is 0.65 inch. The peripheral holes **107** in the ball bearing plate **108** have a diameter of 0.75. In this embodiment, the circular track **106** and the circular track **115** have a depth of about 0.25 inch and a width of about 0.65 inch or more. The ball bearings **107** when placed on the circular track **106**, project above the circular track **106** by about 0.4 inch. When the ball bearing plate **108** of about 0.125 inch thickness is disposed on top of the bottom member **104** to accommodate the ball bearings **107** in the peripheral holes **110**, the ball bearings **107** project above the ball bearing plate **108** by about 0.275 inch. This 0.275 inch portion of the ball bearings is accommodated in the circular track **115** of the top member

111, which also has a depth of about 0.25 inch and width of about 0.65 inch. Since the diameter of the ball bearings is more than the thickness of the ball bearing plate **108**, the depth of the circular track **106**, and the depth of the circular track **115**, the ball bearings **107** are in simultaneous contact with both the circular track **106** of the bottom member **104** and the circular track **115** of the top member **111**. Accordingly, in this embodiment, a rotational force applied by a user to the top member **111** is transmitted to the ball bearings **107** which move rotate and/or move along the circular track **115** on the lower surface **111***c* of the top member **111** and the circular track **106** on the upper surface **104***a* of the bottom member **104**. The linear movement of the ball bearings **107** along the circular tracks **115** and **106** causes the ball bearing plate **108** to rotate in the direction of movement of the ball bearings **107** each of which is accommodated within a peripheral hole **110** of the ball bearing plate **108**. Furthermore, the movement of the ball bearings **107** allows rotation of the top member **111** relative to the bottom member **104**.

In an embodiment, the thickness of the ball bearings **107** is more than 0.65 inch and the peripheral holes **107** in the ball bearing plate **108** have a diameter of more than 0.75 i.e., the diameter of the peripheral holes **107** in the ball bearing plate **108** is approximately 0.1 inch greater than the diameter of the ball bearings **107**,

In an embodiment, the base apparatus **100** comprises about 16 ball bearing **107**, where each of the ball bearings **107** is about 0.5 inch in diameter. In another embodiment, the base apparatus **100** comprises more or less than 16 ball bearings.

In an embodiment, the bottom member **104** comprises a central opening **105**. In an embodiment, the diameter of the central opening **109** of the ball bearing plate **108** is about 10 inches and the outer diameter of the ball bearing plate **108** is about 21 inches. The fastening mechanism **101** comprises a fastening plate **101***a* comprising one or more fasteners **102** affixed and substantially perpendicular to the fastening plate **101***a*. In an embodiment, the fastening plate **101***a* comprises about four fasteners **102** located proximal to the periphery of the fastening plate **101***a*. The four fasteners **102**, for example, four screws, extend upwardly from an upper surface **101***b* of the fastening plate **101***a*, as exemplarily illustrated in FIGS. **1**A, **1**B, **2**, and **3**. In an embodiment, the fastening plate **101***a* is circular in shape, and comprises one or more circular plates with each circular plate concentrically affixed to the circular plate below. In an embodiment, the fastening plate **101***a* comprises a first circular plate **101***c*, and a second circular plate **101***d* concentrically affixed to and positioned above the first plate **101***c*, as illustrated in FIG. **1**B. The diameter of the first circular plate **101***c* is larger than the diameter of the second circular plate **101***d*.

The central opening **105** of the bottom member **104** is configured to receive and accommodate the fastening plate **101***a*. The central opening **109** of the ball bearing plate **108** is configured to receive the fastening mechanism **101** with one or more fasteners **102** of the fastening plate **101***a*. A lower surface **111***c* of the top member **111** comprises openings **114**, for example, screw holes as exemplarily illustrated in FIG. **2**, for receiving and tightening the one or more fasteners of the fastening plate **101***a* for slidably fastening the bottom member **104** to the top member **111**. The one or more circular plates **101***c* and **101***d* are adapted to be accommodated within one or more grooves **104***c* located on an inner surface **105***a* of the central opening **105** of the bottom member **104**. In an embodiment, the diameter of the first circular plate **101***c* is about 5 inches to about 9 inches, and the diameter of the second circular plate **101***d* is about 4 inches to about 8 inches. Accordingly, in an embodiment, the diameter of the central opening **105** of the bottom member **104** is about 5.1 inches to about 9.1 inches.

FIG. **2** exemplarily illustrates an exploded, bottom perspective view of the base apparatus **100**. As exemplarily illustrated in FIG. **2**, FIG. **5**, and FIG. **8**, the base apparatus **100** further comprises gripping feet **103** attached to a lower surface **104***b* of the bottom member **104**. In an embodiment, the base apparatus **100** comprises about six gripping feet **103**. The gripping feet **103** are, for example, knob like structures that allow the bottom member **104** of the base apparatus **100** to grip a ground surface. The diameter of each of the gripping feet **103** is, for example, about $3/4^{th}$ of an inch. The gripping feet **103** are made of a non-slip material, for example, rubber. In an embodiment, bottom ends **103***a* of the gripping feet **103** are configured to adhere to the ground surface. For example, the bottom ends **103***a* of the gripping feet **103** comprise suctions cups that securely attach the base apparatus **100** to the ground surface.

In an embodiment, the top member **111** is positioned on the ball bearing plate **108**. In an embodiment, the circular track **115** on the lower surface **111***c* of the top member **111** is located proximal to a periphery of the lower surface **111***c* of the top member **111**. The circular track **115** of the top member **111** and the circular track **106** of the bottom member **104** act as receptacles for the ball bearings **107** to support and accommodate the ball bearings **107** for smooth rotation of the ball bearing plate **108** and in turn the top member **111**. In an embodiment, the width of the circular track **106**, shown in FIGS. **1**A and **11**A, and circular track **115**, shown in FIGS. **2** and **11**B is about 0.5 inch, and an inner diameter of the circular track **106** and circular track **115** is about 18.5 inches. In an embodiment, an outer diameter of the circular track **106** and circular track **115** is about 19.25 inches.

FIG. **3** exemplarily illustrates an exploded, left side elevation view of the base apparatus. The ball bearing plate **108** and the ball bearings **107** positioned between the bottom member **104** and the top member **111** allow varying degrees of rotation of the bottom member **104** with respect to the top member **111**, for example, up to 360 degrees. In an embodiment as exemplarily illustrated in FIGS. **1**A, **2**, and **3**, the bottom member **104**, the ball bearing plate **108**, and the top member **111** are configured as circular discs.

FIG. **4** exemplarily illustrates an assembled, top perspective view of the base apparatus **100**. The collar **112** of the top member **111** is, for example, about 0.25 inches thick and wraps around the circumference **111***b* of the upper surface **111***a* of the top member **111**. In an embodiment, the height of the collar **112** of the top member **111** is about 1 inch.

In an embodiment, the collar **112** of the top member **111** comprises one or more cutouts **113** of, for example, about 7 inches in length each, for receiving and accommodating one or more handles **1002** of the fitness balance device **1001**. In another embodiment, the collar **112** of the top member **111** comprises two cutouts **113** located approximately diametrically opposite to each other, as illustrated in FIG. **10**. The collar **112** is configured to allow the user of the fitness balance device to accommodate the fitness balance device on the upper surface **111***a* of the top member **111**. Furthermore, the collar **112** is configured to secure and hold the fitness balance device **1001** securely by restricting lateral movement of the fitness balance device **1001** accommodated on the upper surface **111***a* of the top member **111**. For example, when a user exercises using the fitness balance device **1001** accommodated on the upper surface **111***a* of the top member **111**, the collar **112** prevents the fitness balance

device **1001** from laterally slipping out of the upper surface **111***a* of the top member **111** when the user exerts a lateral force on the fitness balance device **1001**. In an embodiment, the fasteners **102** and the ball bearings **107** are made of, for example, metal, alloy, plastic, composites, etc., and the top member **111**, bottom member **104**, the ball bearing plate **108**, and the fastening plate **101***a* are made of, for example, heavy duty plastic. In another embodiment, the ball bearing plate **108**, and the fastening plate **101***a* are made of, for example, metal, alloy, etc.

FIG. **5** exemplarily illustrates an assembled, bottom perspective view of the base apparatus **100**. The bottom member **104** supports the base apparatus **100** via the gripping feet **103** on the ground surface. The gripping feet **103** are attached to a lower surface **104***b* as exemplarily illustrated in FIGS. **1**A, **2**, and **3**, of the bottom member **104**. In an embodiment, a lower surface **101***e* of the fastening plate **101***a* exemplarily illustrated in FIG. **2**, is configured as a non-slip surface for gripping the base apparatus **100** on a ground surface and preventing slippage of the base apparatus **100** on the ground surface. In an alternate embodiment, the gripping feet **103** are detachably attachable to the lower surface **104***b* of the bottom member **104**. The fitness balance device **1001** disposed on the upper surface **111***a* of top member **111** of the base apparatus **100** is rotatable in a clockwise or counterclockwise direction about a vertical axis X-X', as illustrated in FIG. **4**.

FIG. **6**A exemplarily illustrates an assembled, left side elevation view of the base apparatus **100**. The diameter of the top member **111** is larger than the diameter of the bottom member **104** as exemplarily illustrated in FIGS. **1**A, **2**, and **3**. The bottom member **104** is, for example, about 24 inches in diameter, and the top member **111**, is, for example, about 26 inches in diameter. In an embodiment, the diameter of the top member **111** is between 20.25 inches to 30.25 inches to accommodate fitness balances devices **1001** having diameters between 20 inches to 30 inches. In this embodiment, the diameter of the bottom member **104** is between 18.25 inches to 28.25 inches. The smaller diameter of the bottom member **104** and the larger diameter of the top member **111** facilitates easy stacking of one base apparatus **100** above another base apparatus **100** for storage purpose, as exemplarily illustrated in FIG. **6**B. Furthermore, the top member **111** having the larger diameter substantially extends over the bottom member **104** allowing a user to securely hold the handles of the fitness balance device by the user's hands. The user can wrap his or her fingers around the one or more handles **1002** of the fitness balance device **1001** and the top member **111** without facing interference from the bottom member **104**.

In an embodiment, thickness of the bottom member **104** is about 0.5 inch to about 0.75 inch. The thickness of the top member **111** from the upper surface **111***a* to the lower surface **111***c* of the top member **111**, excluding the collar **112** is about 0.5 inch to about 0.75 inch. Therefore, total height of the bottom member **104** and the top member **111**, excluding the collar **112** of the top member **111** is about 1 inch to about 1.5 inches. The total height of the base apparatus **100** from the top of the collar **112** to the lower surface **104***b* of the bottom member **104** is about 2.375 inches. The total height of base apparatus **100** including the feet is about 3 inches.

FIG. **7** exemplarily illustrates a top plan view of the base apparatus **100**. FIG. **8** exemplarily illustrates a bottom view of the base apparatus **100**. FIG. **9**A exemplarily illustrates a bottom view of the base apparatus **100** showing a locking mechanism **900** for locking the top member **111** and the bottom member **104** of the base apparatus **100**. FIG. **9**B exemplarily illustrates a front view of the base apparatus **100** showing the locking mechanism **900**. The locking mechanism **900** comprises a one-nut-stud lock **901***a* and a nut **901***g*. The nut **901***g* comprises a threaded opening therethrough and a plurality of sides surrounding the threaded opening. The nut **901***g* is attached to the lower surface **111***c* of the top member **111** by attaching one of the sides of the nut **901***g* to a periphery of the lower surface **111***c* of the top member **111**. The one-nut-stud lock **901***a* is attached to a periphery of the lower surface **104***b* of the bottom member **104**. The one-nut-stud lock **901***a* comprises a housing **901***b* and a one-nut-stud **901***c* located in the housing **901***b*. A first threaded portion **901***d* of the one-nut-stud **901***c* is configured to mate with and penetrate the threaded opening of the nut **901***b* to lock the top member **111** to the bottom member **104**.

The housing **901***b* comprises a first threaded hole **901***e* located at a first end of the housing **901***b* and a second threaded hole **901***f* located at a second end of the housing **901***b*. The first threaded hole **901***e* accommodates the first threaded portion **901***d* and the second threaded hole **901***f* accommodates a second threaded portion **901***h* of the one-nut-stud **901***c*. The one-nut-stud **901***c* comprises a grip member **901***i* located at a mid-portion of the one-nut-stud **901***c*. The first threaded portion **901***d* is advanced towards the threaded opening of the nut **901***g* by rotating the grip member **901***i* in a clockwise direction.

FIG. **10** exemplarily illustrates a top perspective view of the base apparatus **100**, showing a fitness balance device **1001** positioned on the top member **111** of the base apparatus **100**. The top member **111** and the bottom member **104** are fastened to each other using the fasteners **102** of the fastening plate **101***a* for accommodating the ball bearing plate **108** with the ball bearings **107** there within, as disclosed in the detailed description of FIGS. **1**A, **2**, and **3**-**8**. On assembling the base apparatus **100** and supporting the base apparatus **100** on a ground surface via the gripping feet **103**, a fitness balance device **1001**, for example, a fitness training half ball is positioned on the upper surface **111***a* of the top member **111** exemplarily illustrated in FIG. **10**. A rim **1001***a*, illustrated in FIG. **10**, of the fitness balance device **1001** is, for example, about 1.25 inches in height. The fitness balance device **1001**, when inflated, is, for example, about 10 inches in height. The handles **1002** of the fitness balance device **1001** are inserted into the cutouts **113** of the collar **112** of the top member **111** of the base apparatus **100**. The handles **1002** of the fitness balance device **1001** allow a user to rotate the fitness balance device **1001** positioned on the top member **111** of the base apparatus **100** and perform a balance workout routine. The handles **1002** of the fitness balance device **1001** inserted into the cutouts **113** of the collar **112** of the top member **111** of the base apparatus **100** allows the user to secure and utilize the handles **1002** of the fitness balance device **1001**.

The base apparatus **100** disclosed herein is used as an accessory to the fitness balance device **1001**. The ball bearings **107** accommodated on a circular track **115** of the top member **111** of the base apparatus **100** allows the top member **111**, and, in turn, the fitness balance device **1001** to rotate in a transverse plane with respect to the bottom member **104** when the user performs one or more exercises on the fitness balance device **1001**, as shown in FIG. **10**. Therefore, the base apparatus **100** when used with the fitness balance device **1001** allows a user to perform exercises on the fitness balance device **1001**, for example, in a sitting position, a kneeling position, a side-lying position, a prone position, a supine position, a standing position, etc., with the

additional functionality of rotation of the fitness balance device **1001**, thereby allowing the user to perform movements that cannot be achieved with the fitness balance device **1001** alone.

FIGS. **11**A and **11**B exemplarily illustrate an exploded top view and an exploded bottom view of an alternate embodiment of the base apparatus **100**. As exemplarily illustrated in FIG. **11**B, the bottom member **104** comprises a central opening **105**. Likewise, the ball bearing plate **108** comprises a central opening **109**. Similarly, the top member **111** comprises a central opening **111***d*. In an embodiment, the fastening mechanism **101** comprises a plurality of legs **118** projecting downwards from a periphery of the central opening **111***d* of the top member **111**. The legs **118** comprise outwardly protruding edges **118***a* configured to slidably lock the top member **111** to a recess **118***b* located on a periphery of the central opening **105** of the bottom member **104**, as illustrated in FIG. **11**B. The legs **118** are configured to snap-fit the top member **111** to the bottom member **104** of the base apparatus **100**.

As exemplarily illustrated in FIGS. **11**A and **11**B, the bottom member **104** and the top member **111** comprise a plurality of radially outward extending vertical reinforcement ribs **117***a* and **117***d*. The radially outward extending vertical reinforcement ribs **117***a* of the top member **111** are located on a lower surface **111***c* of the top member **111**. The radially outward extending vertical reinforcement ribs **117***d* of the bottom member **104** are located on an upper surface **104***a* of the bottom member **104**. Further, the vertical reinforcement ribs **117***a* of the top member **111** are arranged continuously in a longitudinally extending circumferentially spaced relationship perpendicular to the circular track **115** in segments **117***b* and **117***c* at the lower surface **111***c* of the top member **111**. In a similar manner, the vertical reinforcement ribs **117***d* of the bottom member **104** are arranged continuously in a longitudinally extending circumferentially spaced relationship perpendicular to the circular track **106** in segments **117***e*, **117***f* of the upper surface **104***a* of the bottom member **104**.

In an embodiment, the vertical reinforcement ribs **117***a* and **117***d* are about 0.15 inch thick. In another embodiment, the thickness of the vertical reinforcement ribs **117***a* and **117***d* is less than 0.15 inch. Furthermore, in an embodiment, the circular track **115** of the top member **111** and the circular track **106** of the bottom member **104** each have a diameter of about 20.2 inches.

The vertical reinforcement ribs **117***a* and **117***d* enhance structural strength of the base apparatus **100**. Furthermore, the vertical reinforcement ribs **117***a* and **117***d*, reduce raw material required to manufacture the base apparatus **100**, thereby reducing weight of the base apparatus **100**.

The foregoing examples have been provided merely for explanation and are in no way to be construed as limiting of the base apparatus **100** disclosed herein. While the base apparatus **100** has been described with reference to various embodiments, it is understood that the words, which have been used herein, are words of description and illustration, rather than words of limitation. Furthermore, although the base apparatus **100** has been described herein with reference to particular means, materials, and embodiments, the base apparatus **100** is not intended to be limited to the particulars disclosed herein; rather, the base apparatus **100** extends to all functionally equivalent structures, methods and uses, such as are within the scope of the appended claims. While multiple embodiments are disclosed, it will be understood by those skilled in the art, having the benefit of the teachings of this specification, that the base apparatus **100** disclosed herein is capable of modifications and other embodiments may be effected and changes may be made thereto, without departing from the scope and spirit of the base apparatus **100** disclosed herein.

I claim:

1. A base apparatus for accommodating and rotating a fitness balance device for a balance workout routine, said base apparatus comprising:

a bottom member for supporting said base apparatus, said bottom member comprising a circular track on an upper surface of said bottom member, wherein a plurality of ball bearings are disposed in said circular track;

a ball bearing plate disposed between the bottom member and a top member, said ball bearing plate comprising a plurality of peripheral holes, wherein each of said peripheral holes is configured to accommodate one of said ball bearings;

said top member in communication with and disposed above said ball bearing plate, wherein said top member comprises a collar extending along a circumference of an upper surface of said top member for accommodating said fitness balance device on said upper surface of said top member; and

a fastening mechanism for slidably fastening said bottom member to said top member, wherein said fastening mechanism comprises a fastening plate comprising one or more fasteners.

2. A base apparatus for accommodating and rotating a fitness balance device for a balance workout routine, said base apparatus comprising:

a bottom member for supporting said base apparatus, said bottom member comprising

a circular track on an upper surface of said bottom member, wherein a plurality of ball bearings are disposed in said circular track;

a ball bearing plate disposed between the bottom member and a top member, said ball bearing plate comprising a plurality of peripheral holes, wherein each of said peripheral holes is configured to accommodate one of said ball bearings;

said top member in communication with and disposed above said ball bearing plate, wherein said top member comprises a collar extending along a circumference of an upper surface of said top member for accommodating said fitness balance device on said upper surface of said top member; and

a fastening mechanism for slidably fastening said bottom member to said top member, wherein said fastening mechanism comprises a fastening plate comprising one or more fasteners, wherein said fastening plate is circular in shape, wherein said fastening plate comprises a first circular plate and a second circular plate, with said first circular plate and said second circular plate concentrically affixed and positioned above with respect to the circular plate below, wherein a diameter of said first circular plate is larger than diameter of said second circular plate, and wherein said second circular plate is in communication with, and positioned above said first circular plate.

3. The base apparatus of claim **2**, wherein said first and second circular plates are adapted to be accommodated within one or more grooves located on an inner surface of said central opening of said bottom member.

4. The base apparatus of claim **2**, wherein said bottom member, said ball bearing plate, and said top member are configured as circular discs.

5. A base apparatus for accommodating and rotating a fitness balance device for a balance workout routine, said base apparatus comprising:

a bottom member for supporting said base apparatus, said bottom member comprising a circular track on an upper surface of said bottom member, wherein a plurality of ball bearings are disposed in said circular track;

a ball bearing plate disposed between the bottom member and a top member, said ball bearing plate comprising a plurality of peripheral holes, wherein each of said peripheral holes is configured to accommodate one of said ball bearings;

said top member in communication with and disposed above said ball bearing plate, wherein said top member comprises a collar extending along a circumference of an upper surface of said top member for accommodating said fitness balance device on said upper surface of said top member, wherein said collar of said top member comprises one or more cutouts for receiving and accommodating one or more handles of said fitness balance device, wherein said cutouts are located approximately diametrically opposite to each other, wherein said collar is configured to allow said user of said fitness balance device to accommodate said fitness balance device on said upper surface of said top member, and wherein said collar is configured to hold said fitness balance device securely by restricting lateral movement of said fitness balance device accommodated on said upper surface of said top member; and

a fastening mechanism for slidably fastening said bottom member to said top member.

6. A base apparatus for accommodating and rotating a fitness balance device for a balance workout routine, said base apparatus comprising:

a bottom member for supporting said base apparatus, said bottom member comprising a circular track on an upper surface of said bottom member, wherein a plurality of ball bearings are disposed in said circular track, and wherein said bottom member further comprises a plurality of gripping feet detachably attached to a lower surface of said bottom member to allow said bottom member to grip a ground surface;

a ball bearing plate disposed between the bottom member and a top member, said ball bearing plate comprising a plurality of peripheral holes, wherein each of said peripheral holes is configured to accommodate one of said ball bearings;

said top member in communication with and disposed above said ball bearing plate, wherein said top member comprises a collar extending along a circumference of an upper surface of said top member for accommodating said fitness balance device on said upper surface of said top member; and

a fastening mechanism for slidably fastening said bottom member to said top member.

7. The base apparatus of claim 6, wherein a lower surface of said top member further comprises a circular track for accommodating said ball bearings disposed in said circular track.

8. The base apparatus of claim 7, wherein said ball bearings are configured to move along said circular track of said top member and said circular track of said bottom member, and wherein said top member is configured to rotate relative to said bottom member with the movement of said ball bearings in said circular track of said top member and said circular track of said bottom member.

9. A base apparatus for accommodating and rotating a fitness balance device for a balance workout routine, said base apparatus comprising:

a bottom member for supporting said base apparatus, said bottom member comprising a circular track on an upper surface of said bottom member, wherein a plurality of ball bearings are disposed in said circular track;

a ball bearing plate disposed between the bottom member and a top member, said ball bearing plate comprising a plurality of peripheral holes, wherein each of said peripheral holes is configured to accommodate one of said ball bearings;

said top member in communication with and disposed above said ball bearing plate, wherein said top member comprises a collar extending along a circumference of an upper surface of said top member for accommodating said fitness balance device on said upper surface of said top member, wherein a diameter of said top member is larger than a diameter of said bottom member for stacking a first base apparatus above a second base apparatus by accommodating said bottom member of said first base apparatus along said top member of said second base apparatus, and wherein said top member having said larger diameter substantially extends over said bottom member allowing a user to securely hold one or more handles of said fitness balance device by said user's hands; and

a fastening mechanism for slidably fastening said bottom member to said top member.

10. A base apparatus for accommodating and rotating a fitness balance device for a balance workout routine, said base apparatus comprising:

a bottom member for supporting said base apparatus, said bottom member comprising a circular track on an upper surface of said bottom member, wherein a plurality of ball bearings are disposed in said circular track;

a ball bearing plate disposed between the bottom member and a top member, said ball bearing plate comprising a plurality of peripheral holes, wherein each of said peripheral holes is configured to accommodate one of said ball bearings;

said top member in communication with and disposed above said ball bearing plate, wherein said top member comprises a collar extending along a circumference of an upper surface of said top member for accommodating said fitness balance device on said upper surface of said top member;

a fastening mechanism for slidably fastening said bottom member to said top member; and

a locking mechanism, wherein said locking mechanism comprises a one-nut-stud lock and a nut, wherein said nut comprises a threaded opening therethrough and a plurality of sides surrounding said threaded opening, wherein said nut is attached to said lower surface of said top member by attaching one of said sides to a periphery of said lower surface of said top member, wherein said one-nut-stud lock is attached to a periphery of said lower surface of said bottom member, wherein said one-nut-stud lock comprises a housing and a one-nut-stud located in said housing, and wherein a first threaded portion of said one-nut-stud is configured to mate with and penetrate said threaded opening of said nut to lock said top member to said bottom member.

11. The base apparatus of claim 10, wherein said housing comprises a first threaded hole located at a first end of said housing and a second threaded hole located at a second end

of said housing, wherein said first threaded hole accommodates said first threaded portion and said second threaded hole accommodates a second threaded portion of said one-nut-stud.

12. The base apparatus of claim **11**, wherein said one-nut-stud comprises a grip member located at a mid-portion of said one-nut-stud, wherein said first threaded portion is advanced towards said threaded opening of said nut by rotating said grip member in a clockwise direction.

13. The base apparatus of claim **10**, wherein said bottom member comprises a central opening, wherein said ball bearing plate comprises a central opening, and wherein said top member comprises a central opening.

14. The base apparatus of claim **13**, wherein said fastening mechanism comprises a plurality of legs projecting downwards from a periphery of said central opening of said top member, wherein said legs comprise outwardly protruding edges configured to slidably lock said top member to a recess located on a periphery of said central opening of said bottom member.

15. The base apparatus of claim **10**, wherein said bottom member and said top member further comprise a plurality of radially outward extending vertical reinforcement ribs, wherein said radially outward extending vertical reinforcement ribs of said top member are located on a lower surface of said top member, and wherein said radially outward extending vertical reinforcement ribs of said bottom member are located on an upper surface of said bottom member.

* * * * *