US010710270B1

(12) **United States Patent**
Lincoln

(10) **Patent No.: US 10,710,270 B1**
(45) **Date of Patent: Jul. 14, 2020**

(54) **ATTACHING OBJECTS MADE OF DISSIMILAR MATERIALS USING A MOLDED ATTACHMENT BLOCK**

(71) Applicant: **Timothy Martin Lincoln**, Gonzales, CA (US)

(72) Inventor: **Timothy Martin Lincoln**, Gonzales, CA (US)

(*) Notice: Subject to any disclaimer, the term of this patent is extended or adjusted under 35 U.S.C. 154(b) by 234 days.

(21) Appl. No.: **16/005,691**

(22) Filed: **Jun. 12, 2018**

(51) **Int. Cl.**

B26B 7/00	(2006.01)
E04C 5/08	(2006.01)
B28B 1/26	(2006.01)
B28B 7/00	(2006.01)

(52) **U.S. Cl.**
CPC ***B28B 1/266*** (2013.01); ***B28B 7/0014*** (2013.01); *B28B 2007/005* (2013.01); *E04C 5/08* (2013.01); *E04C 5/085* (2013.01)

(58) **Field of Classification Search**
CPC E02D 5/50; E04C 5/085
See application file for complete search history.

(56) **References Cited**

U.S. PATENT DOCUMENTS

2007/0125017 A1* 6/2007 Blount E04C 5/085 52/223.1

* cited by examiner

Primary Examiner — Peter L Vajda
Assistant Examiner — Paul Spiel
(74) *Attorney, Agent, or Firm* — Ashok Tankha

(57) **ABSTRACT**

A method for attaching a first object to one or more second objects of dissimilar materials, without any bonding material, using a molded attachment block is provided. Anchoring grooves are created and a constrained assembly is positioned at opposing sections on a surface of the first object. A tension is generated in tension bearing members anchored in the anchoring grooves and extended along a length of the constrained assembly. The constrained assembly is constricted between mold side members positioned perpendicular to the mold end members. The tension bearing members are clamped between bolt assemblies. A viscous liquid is poured and cured on the constrained assembly, the tension bearing members, the anchoring grooves, and the bolt assemblies for creating the molded attachment block with opposing ends of the threaded members of the constrained assembly extending outwardly from the molded attachment block for attachment to second objects without any bonding material.

15 Claims, 19 Drawing Sheets

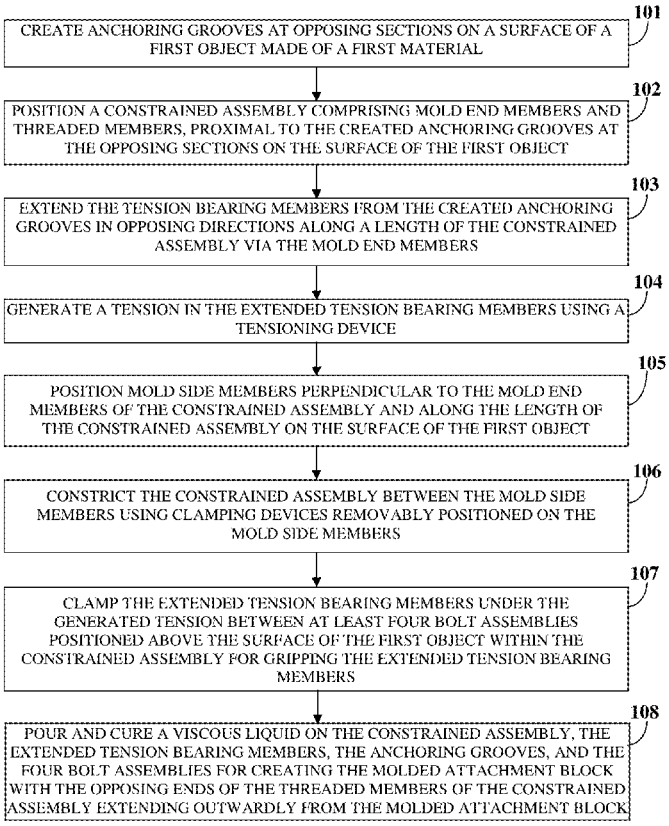

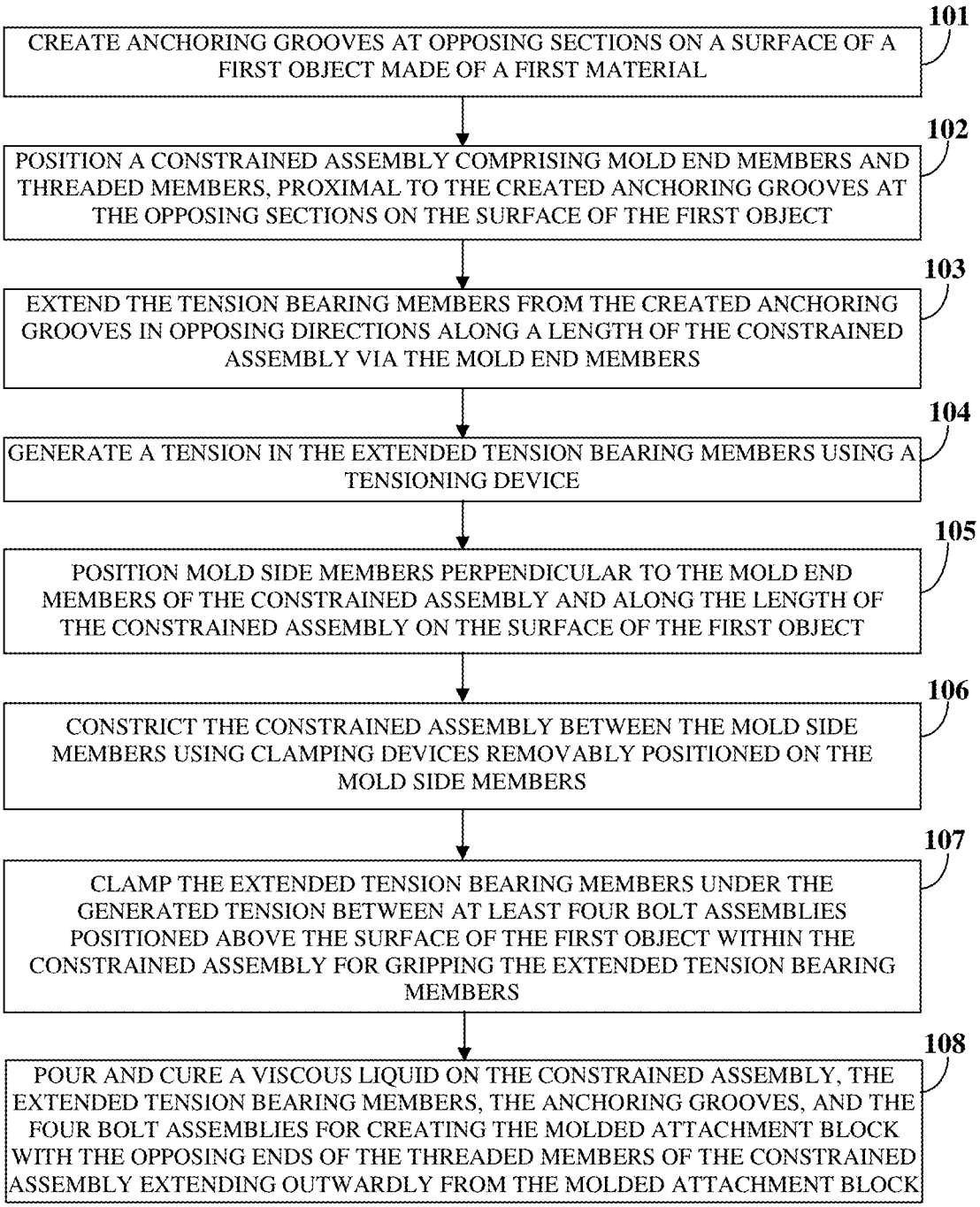
101
CREATE ANCHORING GROOVES AT OPPOSING SECTIONS ON A SURFACE OF A FIRST OBJECT MADE OF A FIRST MATERIAL
102
POSITION A CONSTRAINED ASSEMBLY COMPRISING MOLD END MEMBERS AND THREADED MEMBERS, PROXIMAL TO THE CREATED ANCHORING GROOVES AT THE OPPOSING SECTIONS ON THE SURFACE OF THE FIRST OBJECT
103
EXTEND THE TENSION BEARING MEMBERS FROM THE CREATED ANCHORING GROOVES IN OPPOSING DIRECTIONS ALONG A LENGTH OF THE CONSTRAINED ASSEMBLY VIA THE MOLD END MEMBERS
104
GENERATE A TENSION IN THE EXTENDED TENSION BEARING MEMBERS USING A TENSIONING DEVICE
105
POSITION MOLD SIDE MEMBERS PERPENDICULAR TO THE MOLD END MEMBERS OF THE CONSTRAINED ASSEMBLY AND ALONG THE LENGTH OF THE CONSTRAINED ASSEMBLY ON THE SURFACE OF THE FIRST OBJECT
106
CONSTRICT THE CONSTRAINED ASSEMBLY BETWEEN THE MOLD SIDE MEMBERS USING CLAMPING DEVICES REMOVABLY POSITIONED ON THE MOLD SIDE MEMBERS
107
CLAMP THE EXTENDED TENSION BEARING MEMBERS UNDER THE GENERATED TENSION BETWEEN AT LEAST FOUR BOLT ASSEMBLIES POSITIONED ABOVE THE SURFACE OF THE FIRST OBJECT WITHIN THE CONSTRAINED ASSEMBLY FOR GRIPPING THE EXTENDED TENSION BEARING MEMBERS
108
POUR AND CURE A VISCOUS LIQUID ON THE CONSTRAINED ASSEMBLY, THE EXTENDED TENSION BEARING MEMBERS, THE ANCHORING GROOVES, AND THE FOUR BOLT ASSEMBLIES FOR CREATING THE MOLDED ATTACHMENT BLOCK WITH THE OPPOSING ENDS OF THE THREADED MEMBERS OF THE CONSTRAINED ASSEMBLY EXTENDING OUTWARDLY FROM THE MOLDED ATTACHMENT BLOCK

FIG. 1

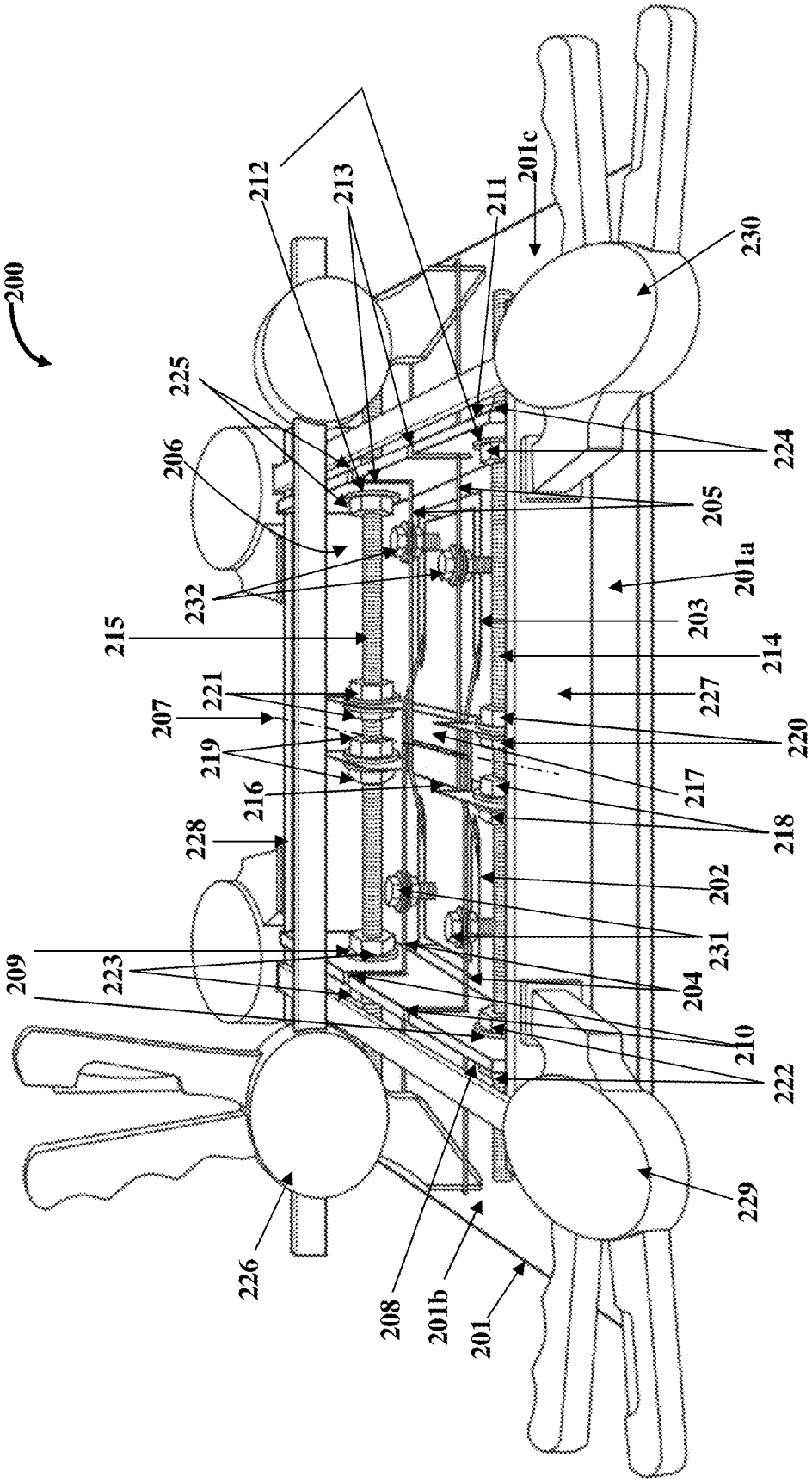
200
212
213
211
201c
230
225
206
224
205
232
201a
215
203
214
221
227
207
220
219
217
216
218
228
202
231
209
223
204
210
222
229
226
208
201b
201

FIG. 2

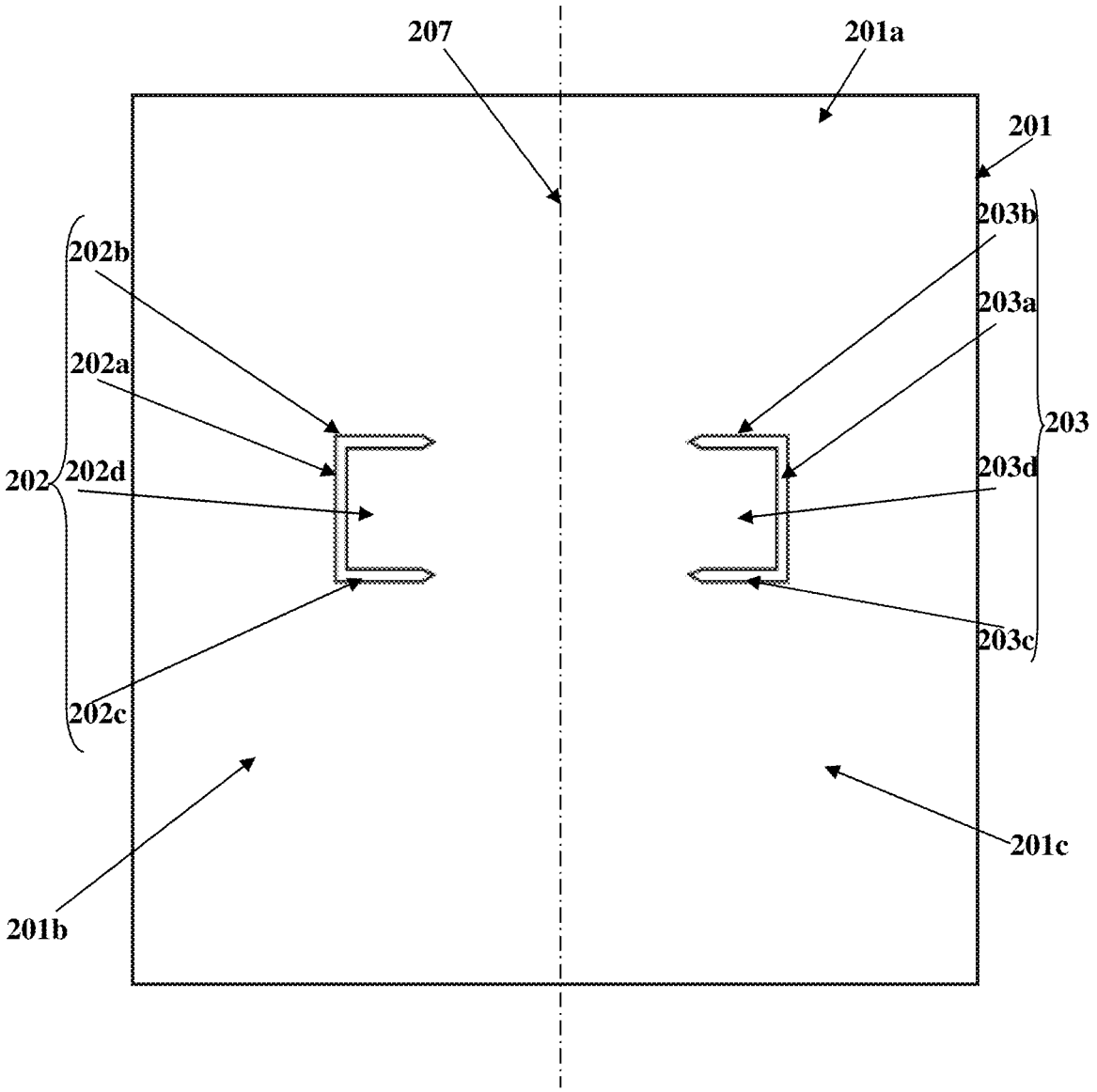
207
201a
201
203b
202b
203a
202a
203
202
202d
203d
203c
202c
201c
201b

FIG. 3

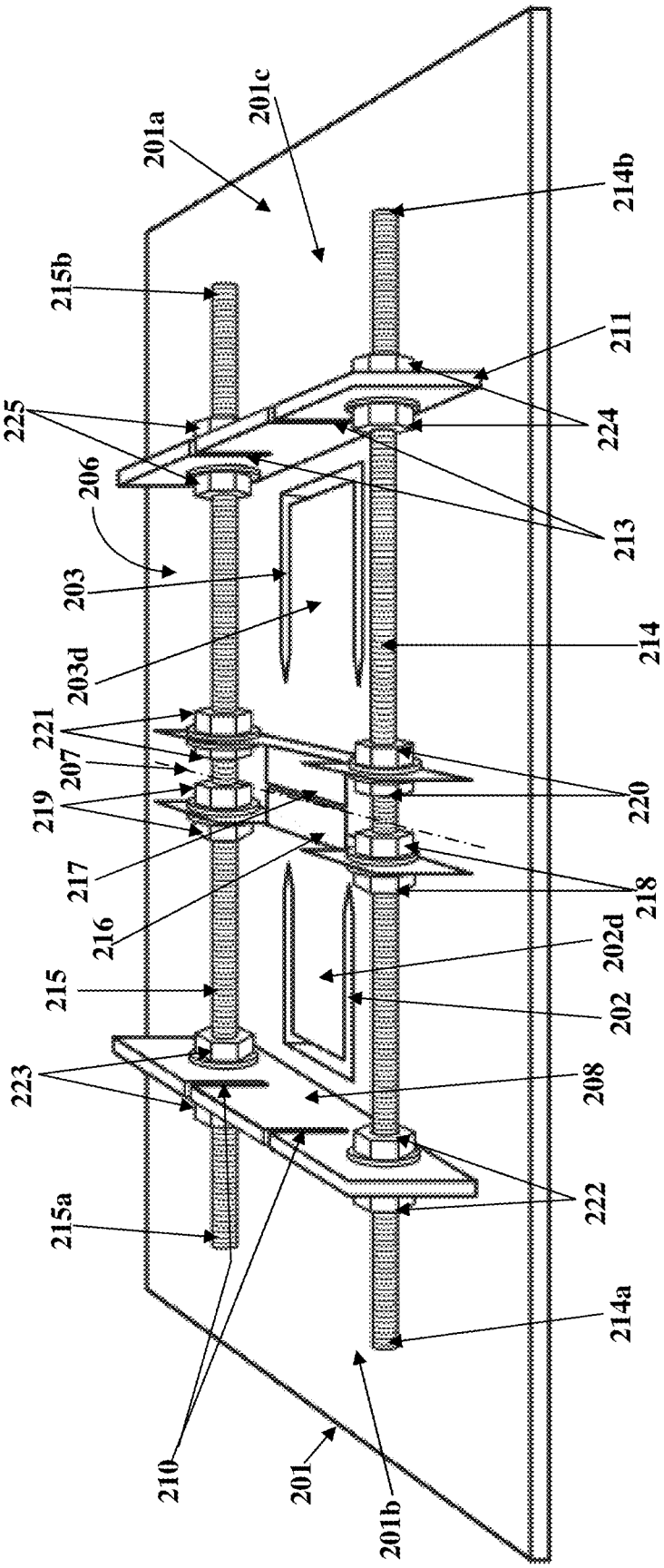
201a
201c
214b
215b
211
225
224
206
213
203
214
203d
221
207
220
219
217
218
216
202d
215
202
223
208
222
215a
214a
210
201
201b

FIG. 4

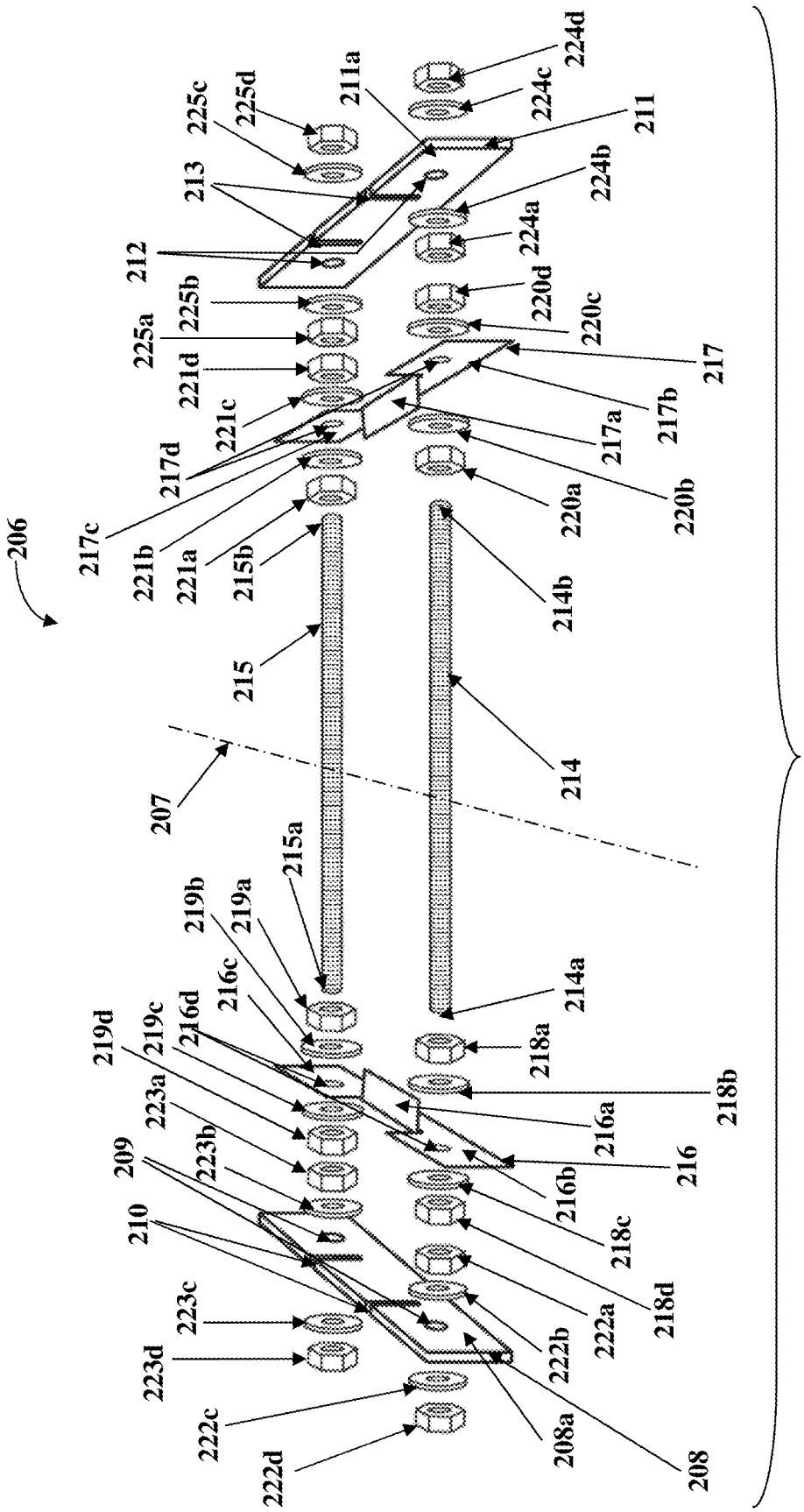
206
207
208
208a
209
210
211
211a
212
213
214
214a
214b
215
215a
215b
216
216a
216b
216c
216d
217
217a
217b
217c
217d
218a
218b
218c
218d
219a
219b
219c
219d
220a
220b
220c
220d
221a
221b
221c
221d
222a
222b
222c
222d
223a
223b
223c
223d
224a
224b
224c
224d
225a
225b
225c
225d

FIG. 5

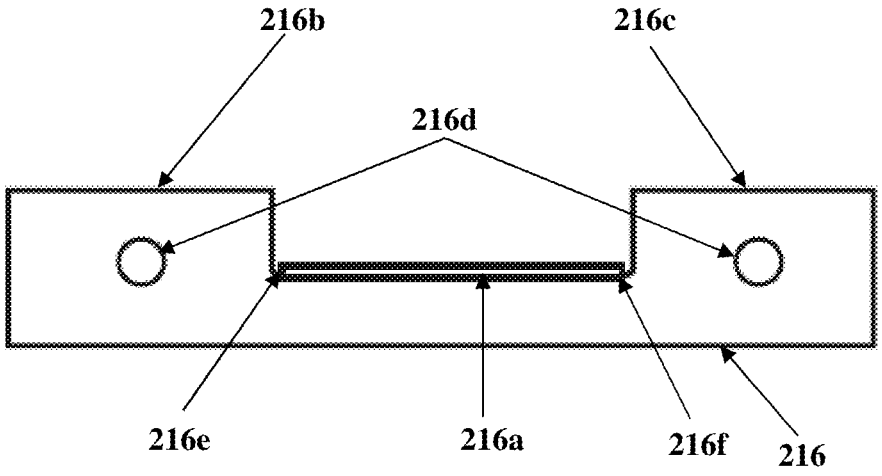

FIG. 6A

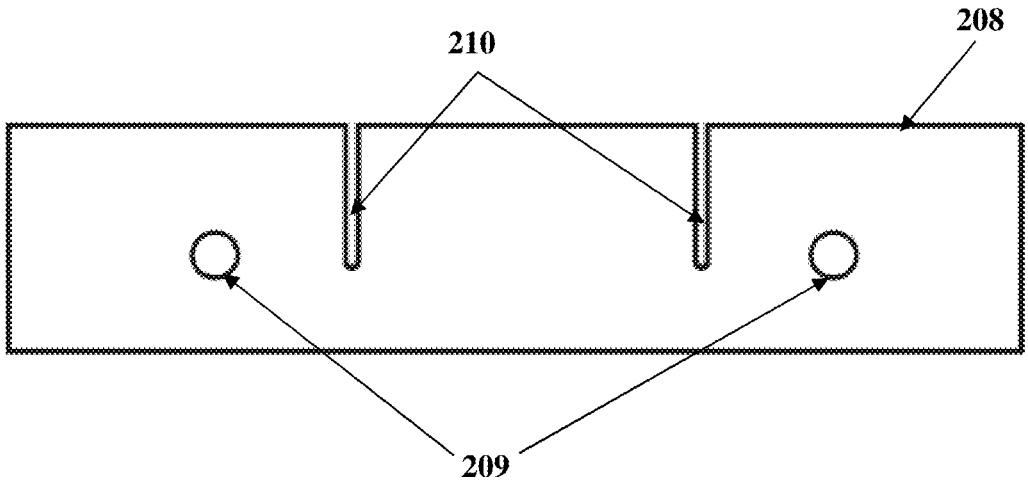

FIG. 6B

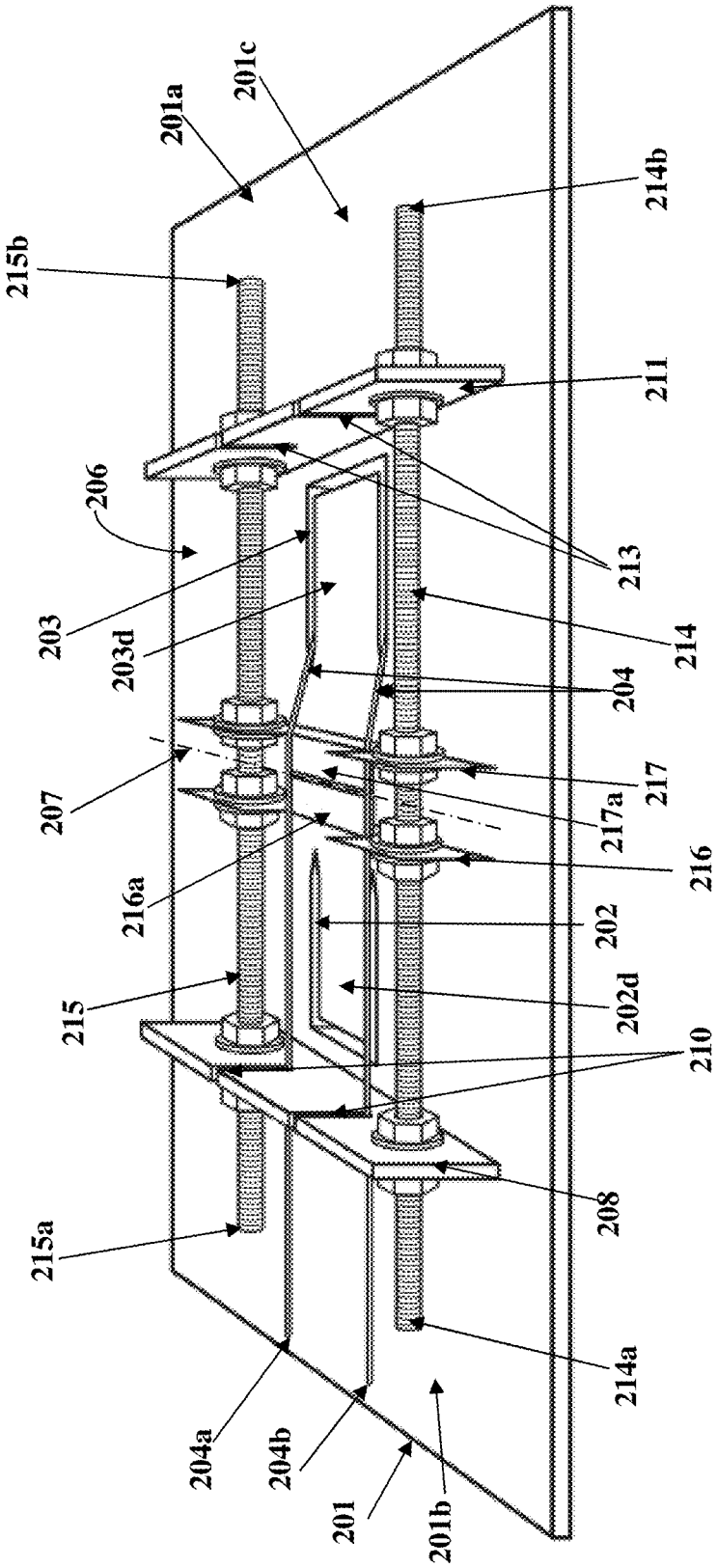
201a
201c
215b
214b
211
206
213
203
203d
214
204
207
217
217a
216
216a
202
215
202d
210
208
215a
214a
204a
204b
201
201b

FIG. 7

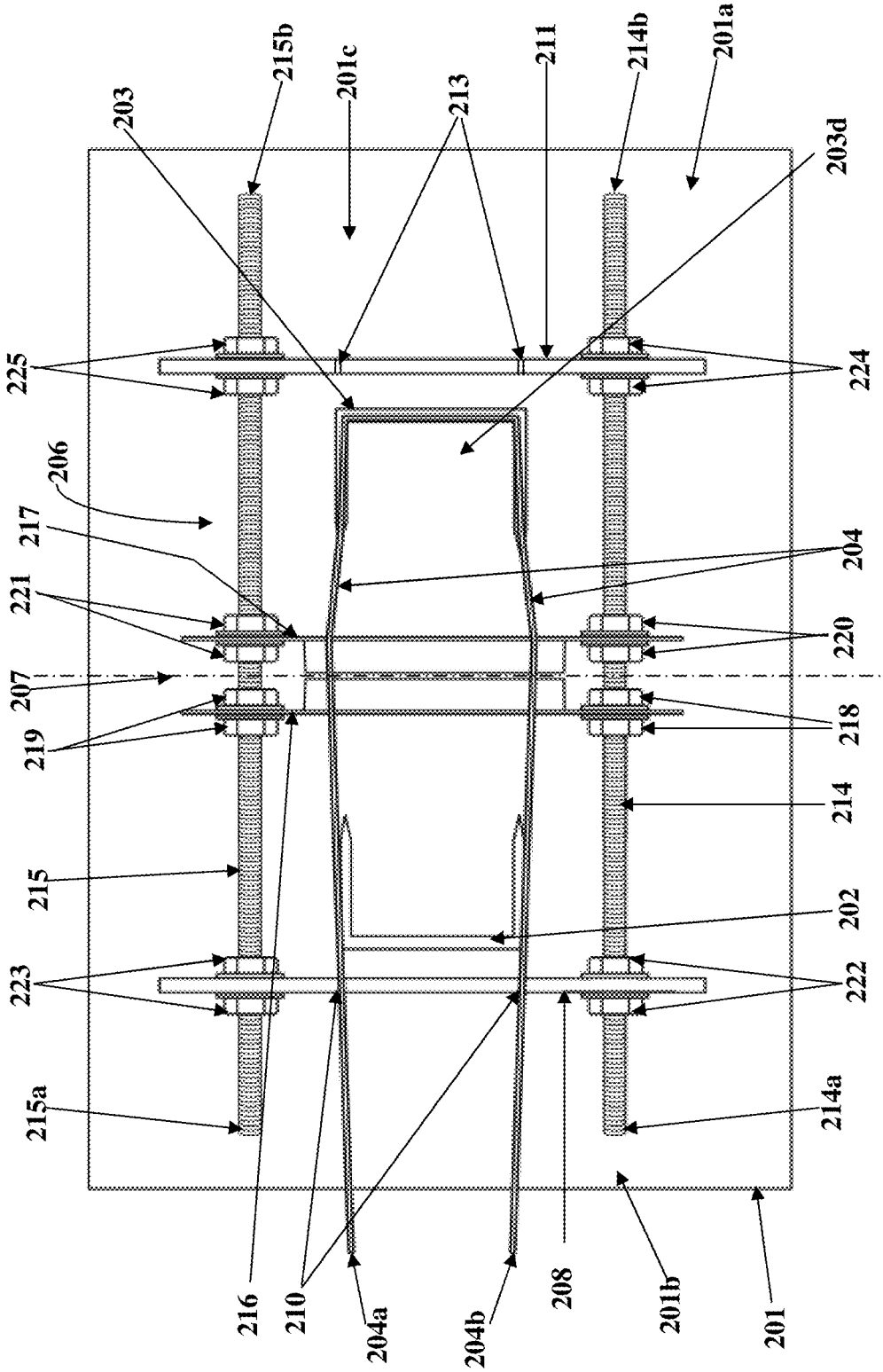
203
215b
201c
213
211
214b
201a
203d
225
224
206
217
204
221
220
207
218
219
214
215
202
223
222
215a
214a
216
210
204a
204b
208
201b
201

FIG. 8

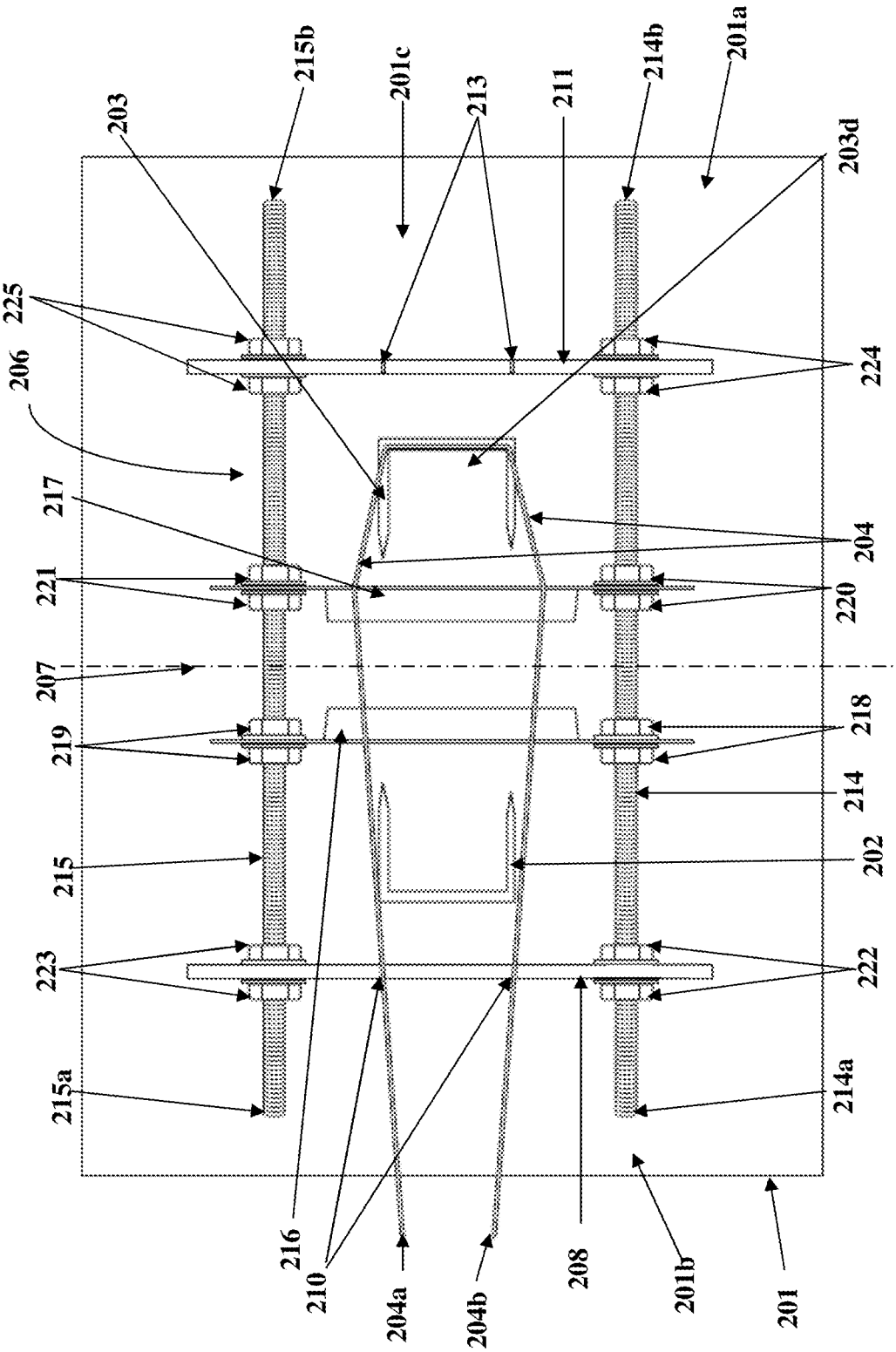
203
215b
201c
213
211
214b
201a
203d
225
206
217
221
207
219
215
223
215a
224
204
220
218
214
202
222
214a
216
210
204a
204b
208
201b
201

FIG. 9

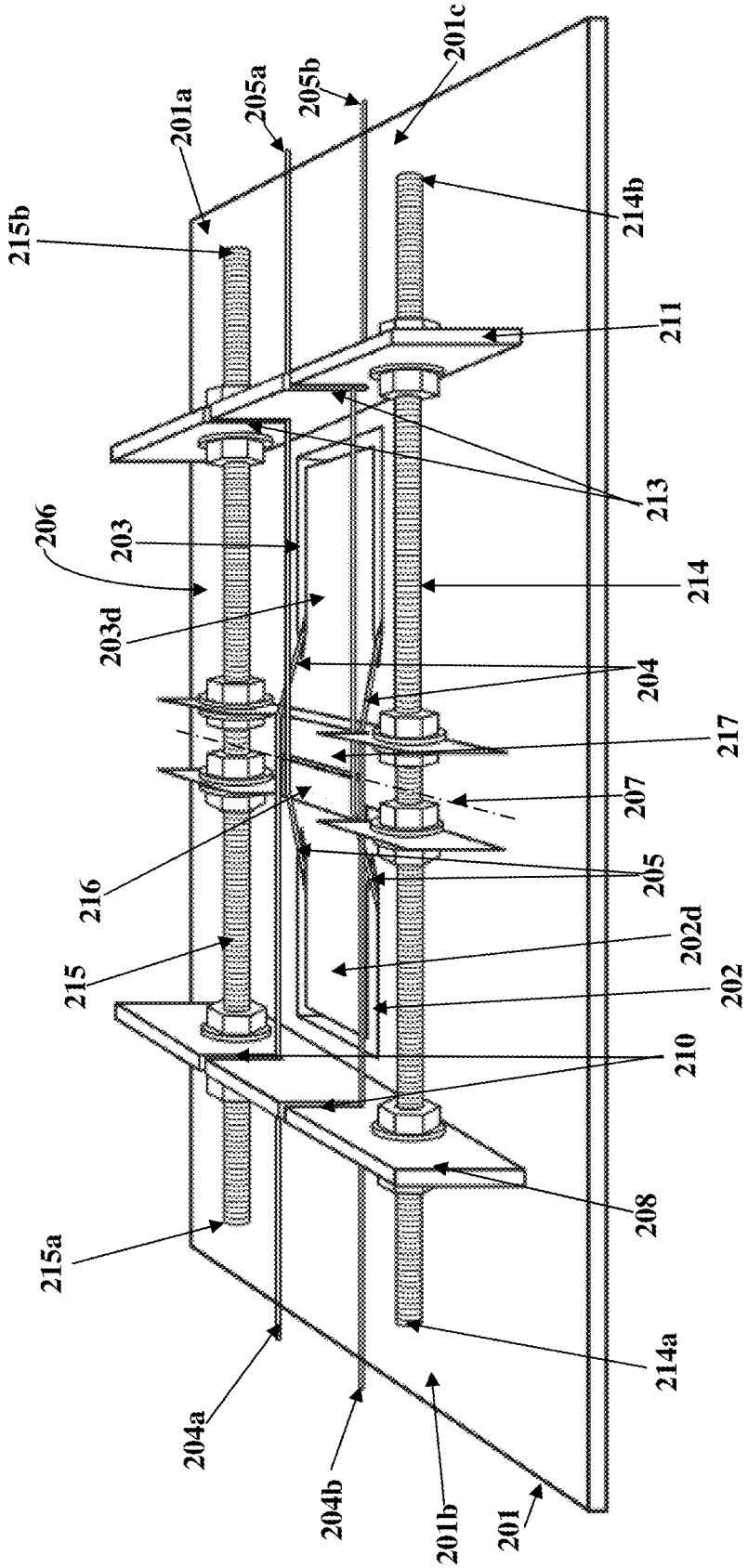
201a
205a
205b
201c
215b
214b
211
213
206
203
214
203d
204
217
207
216
205
202d
215
202
210
208
215a
214a
204a
204b
201b
201

FIG. 10

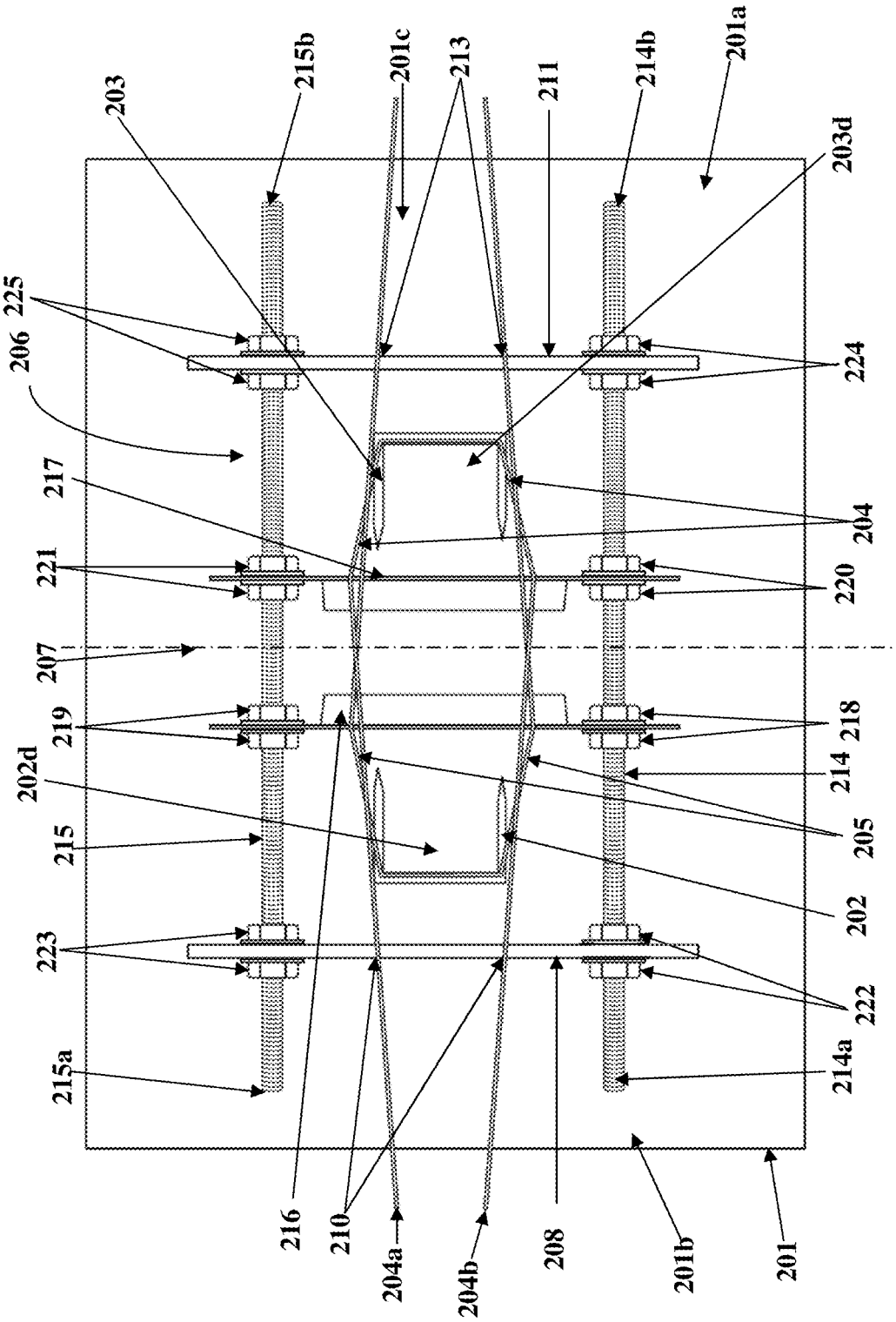
203
215b
201c
213
211
214b
201a
203d
225
206
224
217
204
221
220
207
219
218
202d
214
215
205
202
223
222
215a
214a
216
210
204a
204b
208
201b
201

FIG. 11

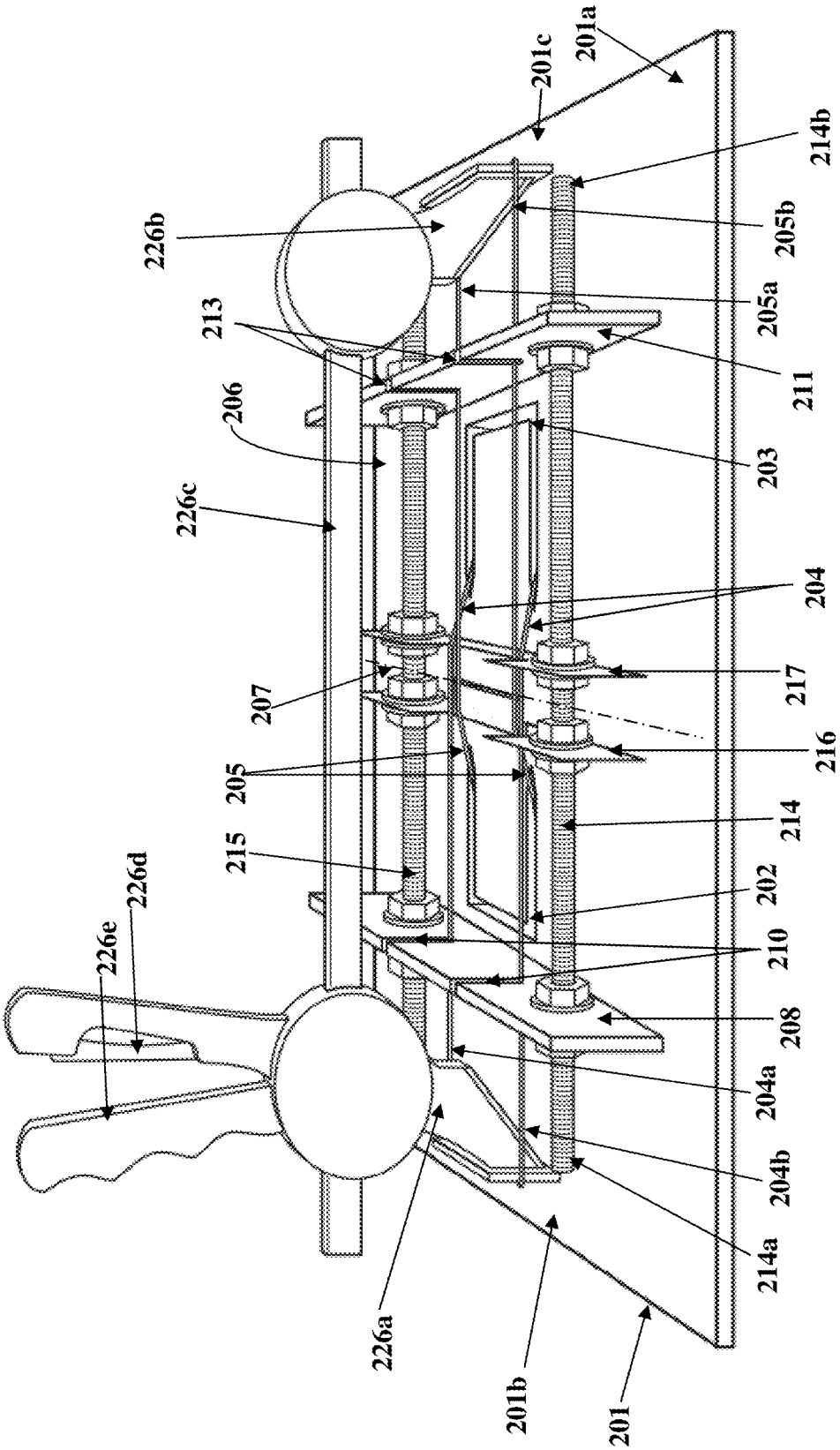
201a
201c
214b
205b
226b
205a
213
211
206
203
226c
204
217
207
216
205
214
215
202
226d
226e
210
208
204a
204b
214a
226a
201b
201

FIG. 12

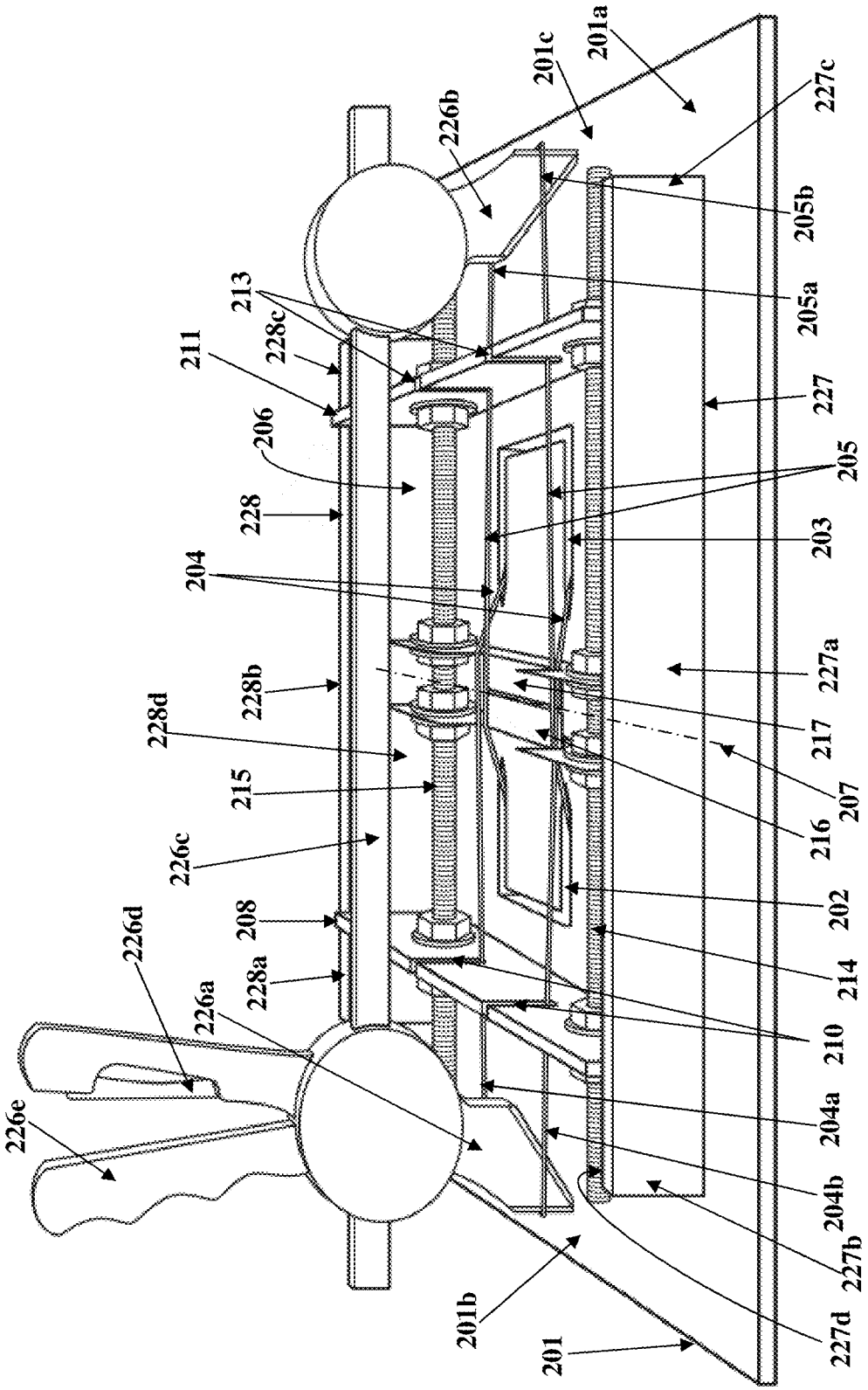
201a
201c
227c
226b
205b
205a
213
228c
211
227
206
205
228
203
204
227a
228b
217
228d
207
215
216
226c
202
208
214
226d
228a
226a
210
204a
226e
204b
227b
201b
227d
201

FIG. 13

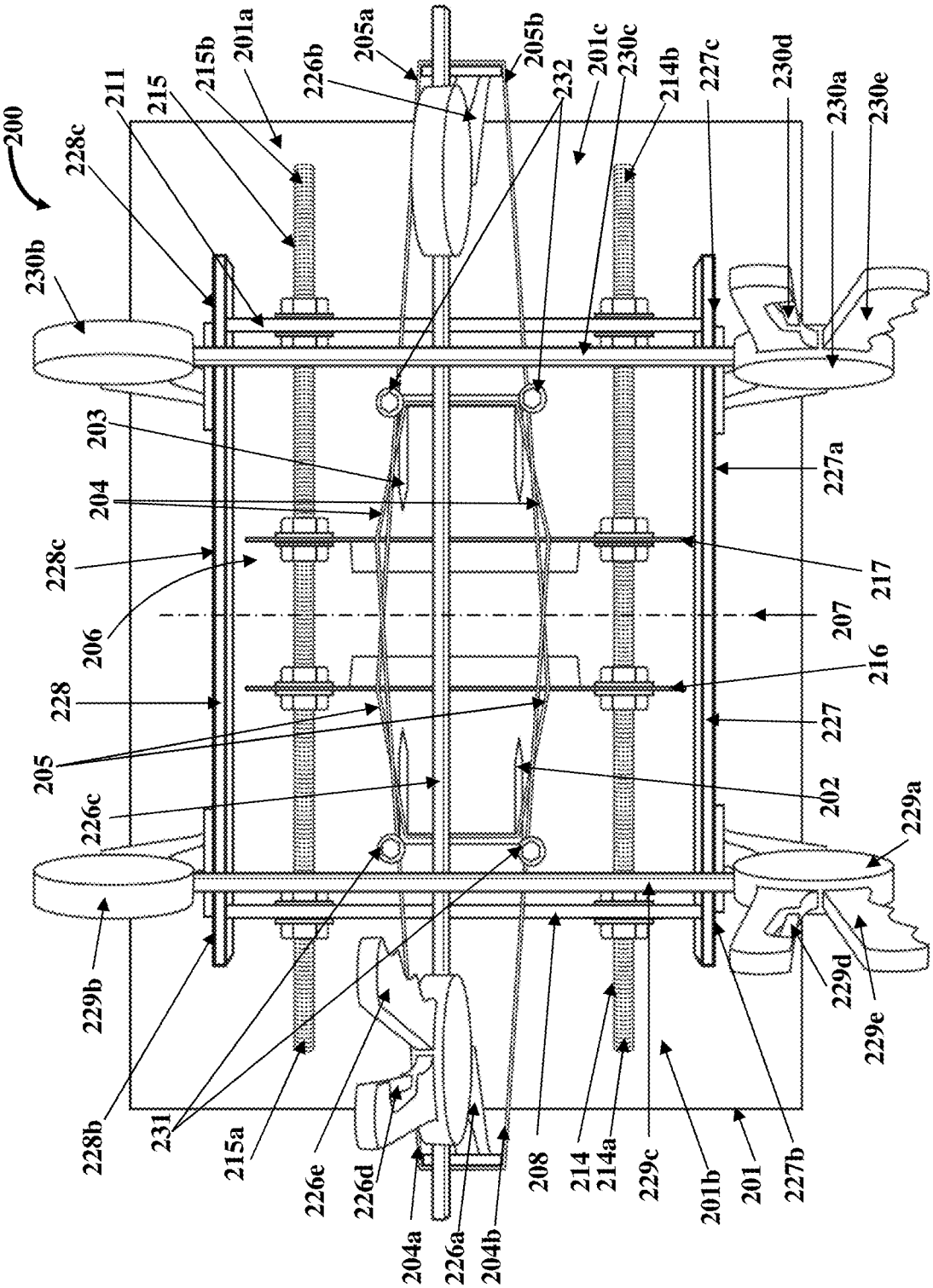
200
228c
211
215
215b
201a
226b
205a
205b
232
201c
230c
214b
227c
230d
230a
230e
230b
203
204
228c
206
228
205
226c
229b
228b
231
215a
226e
226d
204a
226a
204b
208
214
214a
229c
201b
201
227b
229d
229e
229a
202
227
216
207
217
227a

FIG. 14

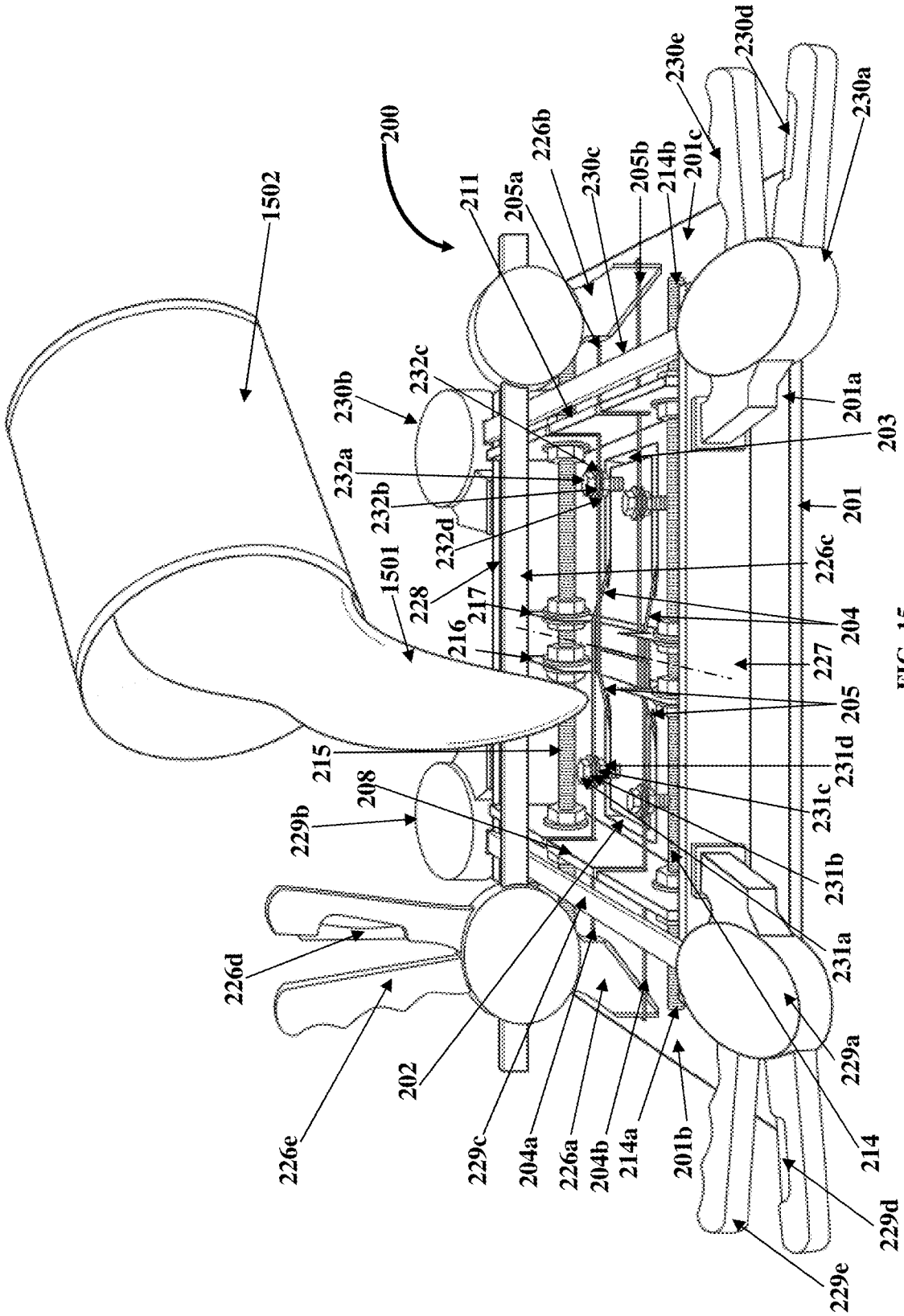
1502
200
211
205a
226b
230c
205b
214b
201c
230e
230d
230a
230b
232c
232a
232b
232d
1501
228
217
216
201a
203
201
226c
204
227
205
215
208
229b
231d
231c
231b
231a
226d
226e
202
229c
204a
226a
204b
214a
201b
229a
214
229d
229e

FIG. 15

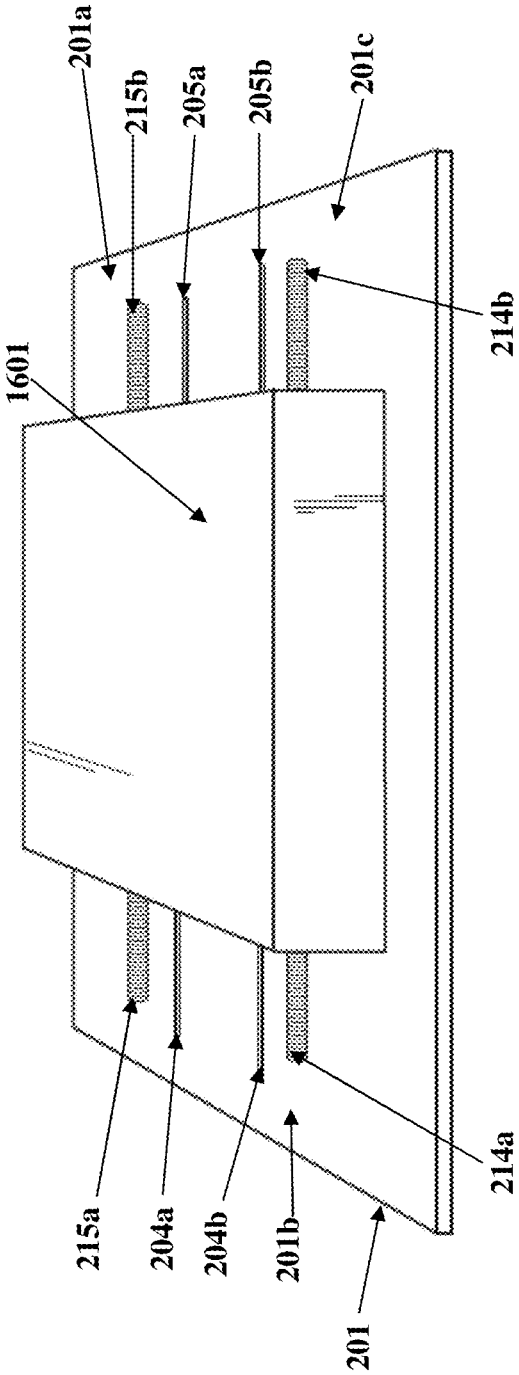
201a
215b
205a
205b
201c
1601
214b
215a
204a
204b
201b
201
214a

FIG. 16A

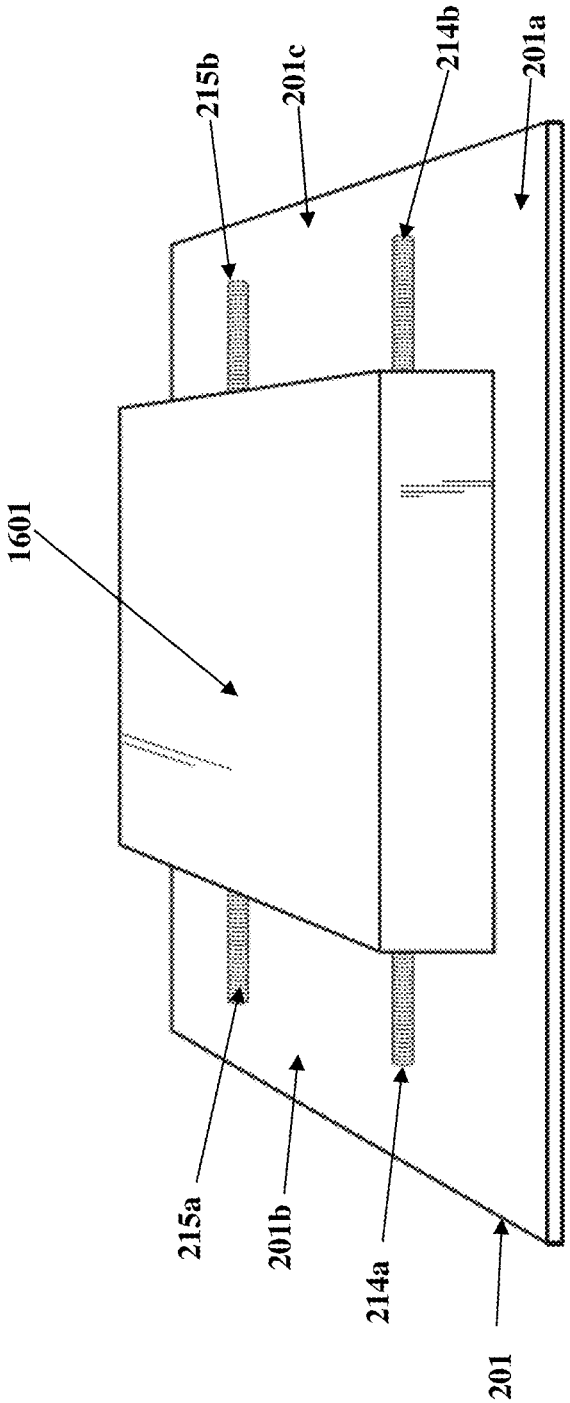

FIG. 16B

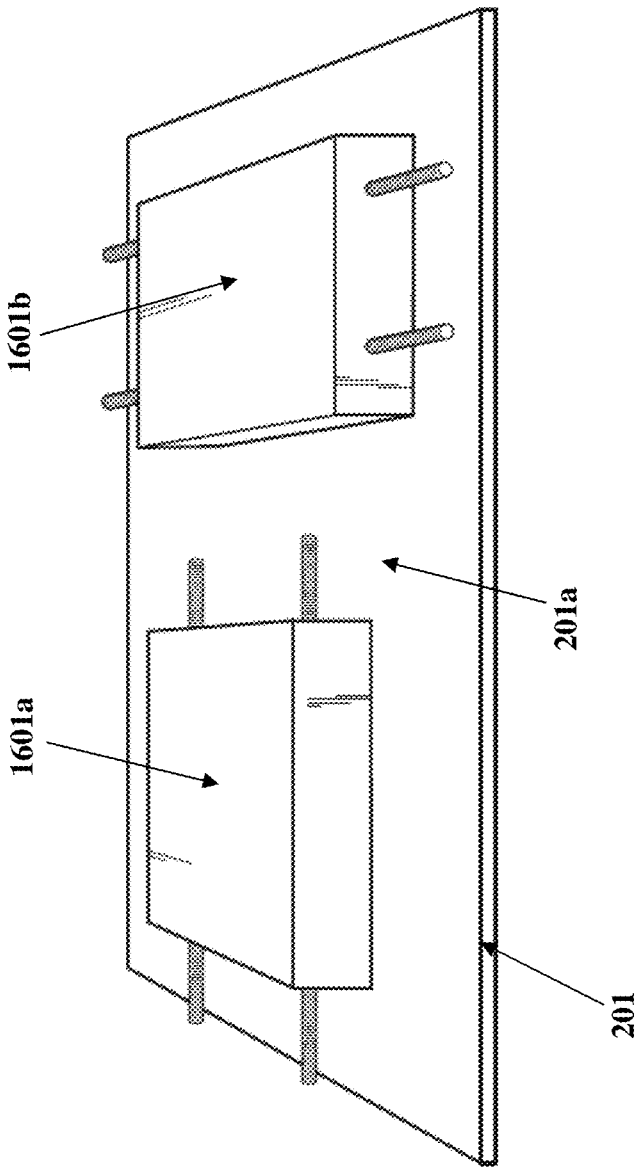

FIG. 17

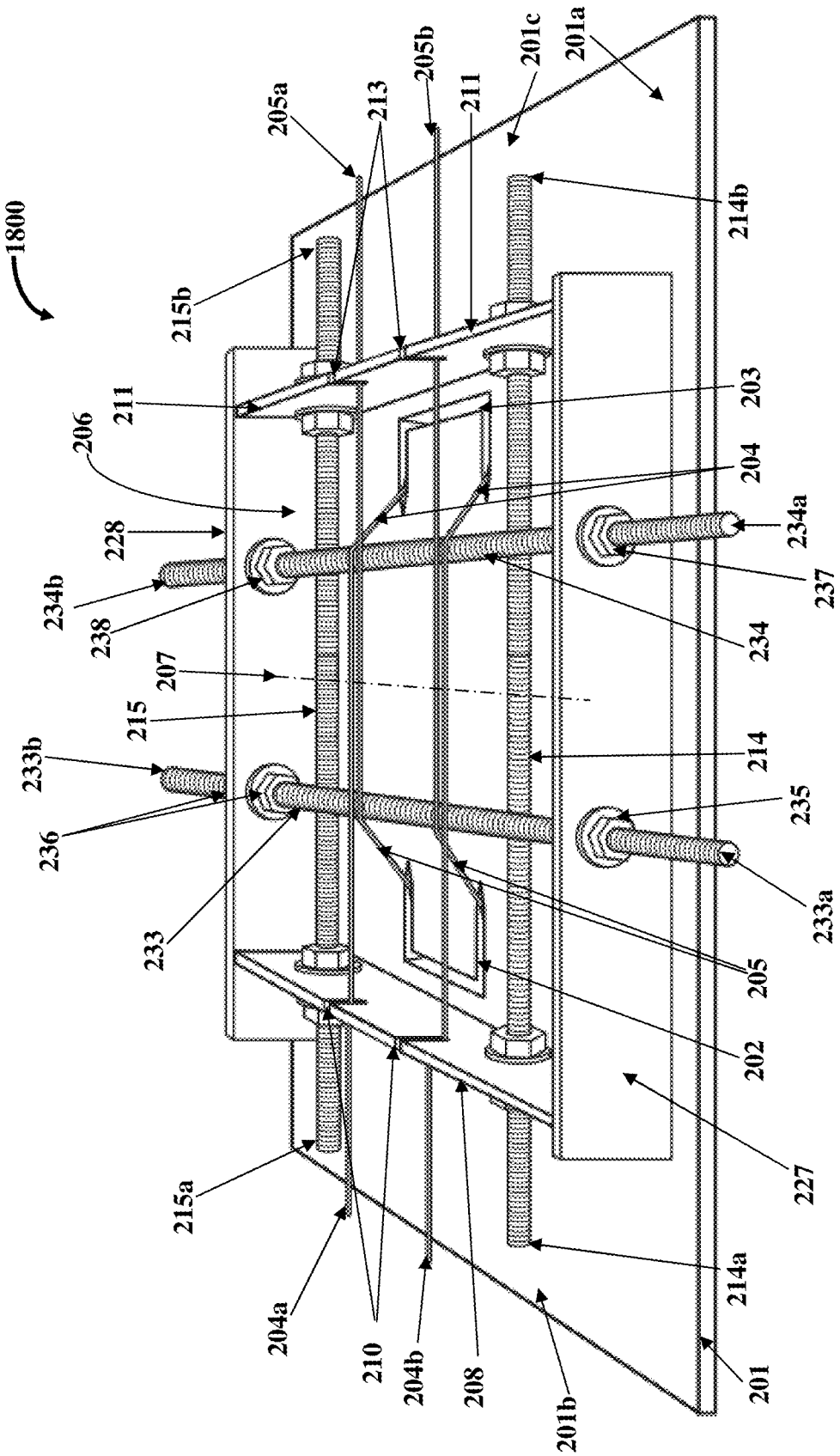
1800
205a
213
205b
211
201c
201a
214b
215b
211
203
206
204
228
234a
234b
237
238
234
207
215
214
233b
235
236
233a
233
205
202
227
215a
214a
204a
210
204b
208
201b
201

FIG. 18

ATTACHING OBJECTS MADE OF DISSIMILAR MATERIALS USING A MOLDED ATTACHMENT BLOCK

BACKGROUND

Objects made of dissimilar materials are typically attached to each other using a bonding material, for example, glue, adhesives, mortar, etc. Consider an example where tiles are attached to a surface, for example, a wall, for covering wall surfaces, for constructing standalone structures to support loads, for partitioning structures, for ornamental purposes, etc. Gaps between adjacent tiles to be attached are filled with the bonding material. The assembly of the adjacent tiles forms a tile assembly that is primarily strengthened by the bonding material. Over time, the tile assembly may lose its strength due to a change in the properties of the bonding material caused, for example, by a change in climate, a corrosive environment, or variable loads. Replacing the bonding material or clipping the tiles may damage the tile assembly or mar the aesthetic appearance of the tile assembly.

To avoid the problems associated with using the bonding material for attaching objects of dissimilar materials, some methods use a mechanical means for attaching the objects. However, the mechanical means, for example, ridges, grooves, clips, screws, bolts, nails, etc., may also damage the objects, for example, the tiles, and mar the aesthetic appearance of the tiles. Moreover, the mechanical means are typically exposed to an external environment and require continuous maintenance. The maintenance comprises a regular and laborious manual examination of the condition of the mechanical means that attach each of the tiles to a surface, for example, a wall. Therefore, there is a need for a modular structure that encases the mechanical means, retains tension in the encased mechanical means under different conditions of strain experienced by the mechanical means, and protects the mechanical means from the external environment to reduce time and effort involved in maintenance of each of the mechanical means on a regular basis. Moreover, there is a need for one or more connecting elements, for example, hooks, threaded rods, flat bars, etc., that extend from the modular structure and facilitate attachment of an object to another object of a dissimilar material.

Hence, there is a long felt but unresolved need for a method for attaching a first object made of a first material to one or more second objects made of one or more of multiple second materials that are dissimilar to the first material of the first object, using a molded attachment block, that is, a modular structure, and without using any bonding material and without damaging the surface and aesthetic appearance of the first object.

SUMMARY OF THE INVENTION

This summary is provided to introduce a selection of concepts in a simplified form that are further disclosed in the detailed description of the invention. This summary is not intended to determine the scope of the claimed subject matter.

The method disclosed herein addresses the above recited need for attaching a first object made of a first material to one or more second objects made of one or more of multiple second materials that are dissimilar to the first material of the first object, using a molded attachment block, that is, a modular structure, and without using any bonding material and without damaging the surface and aesthetic appearance of the first object. The method disclosed herein comprises assembling the molded attachment block and attaching one or more second objects made of one or more second materials dissimilar to the first material of the first object, to a surface of the first object using the assembled molded attachment block. The molded attachment block encases mechanical means comprising anchoring grooves, tension bearing members, wire deflector plates, mold end members, threaded members, mold side members, etc., retains tension in the encased mechanical means under different conditions of strain experienced by the mechanical means, and protects the mechanical means from an external environment, thereby reducing time and effort involved in maintenance of each of the mechanical means on a regular basis.

In the method disclosed herein, anchoring grooves are created at opposing sections on a surface of the first object made of the first material. The anchoring grooves anchor tension bearing members on the first object. A constrained assembly comprising mold end members and threaded members is positioned proximal to the created anchoring grooves at the opposing sections on the surface of the first object. The mold end members comprise openings for receiving and perpendicularly engaging opposing ends of the threaded members. The tension bearing members are extended from the created anchoring grooves in opposing directions along a length of the constrained assembly via the mold end members. A tension is generated in the extended tension bearing members using a tensioning device. Mold side members are positioned perpendicular to the mold end members of the constrained assembly and along the length of the constrained assembly on the surface of the first object. The constrained assembly is constricted between the mold side members using clamping devices that are removably positioned on the mold side members. The extended tension bearing members, under the generated tension, are clamped between at least four bolt assemblies positioned above the surface of the first object within the constrained assembly for gripping the extended tension bearing members. A viscous liquid is poured on the constrained assembly, the extended tension bearing members, the anchoring grooves, and the bolt assemblies, and cured for creating the molded attachment block with the opposing ends of the threaded members of the constrained assembly extending outwardly from the molded attachment block. The clamping devices, and in an embodiment, the mold side members are removed from the created molded attachment block after the poured viscous liquid is cured. Ends of the extended tension bearing members that extend outwardly from the created molded attachment block are cut. The opposing ends of the threaded members extending from the created molded attachment block allow attachment of one or more second objects made of one or more second materials dissimilar to the first material of the first object to the surface of the first object without any bonding material.

BRIEF DESCRIPTION OF THE DRAWINGS

The foregoing summary, as well as the following detailed description of the invention, is better understood when read in conjunction with the appended drawings. For illustrating the invention, exemplary constructions of the invention are shown in the drawings. However, the invention is not limited to the specific methods and structures disclosed herein. The description of a method step or a structure referenced by a numeral in a drawing is applicable to the description of that method step or structure shown by that same numeral in any subsequent drawing herein.

FIG. **1** illustrates a method for attaching a first object made of a first material to one or more second objects made of one or more of multiple second materials dissimilar to the first material of the first object without any bonding material, using a molded attachment block.

FIG. **2** exemplarily illustrates a top perspective view of an assembly for creating a molded attachment block on a surface of a first object made of a first material for attaching to one or more second objects made of one or more second materials.

FIG. **3** exemplarily illustrates a top plan view of a first object made of a first material, showing anchoring grooves created at opposing sections on a surface of the first object.

FIG. **4** exemplarily illustrates a top perspective view showing a constrained assembly positioned on the surface of the first object.

FIG. **5** exemplarily illustrates an exploded view of the constrained assembly used for creating the molded attachment block.

FIG. **6**A exemplarily illustrates a front elevation view of a wire deflector plate of the constrained assembly.

FIG. **6**B exemplarily illustrates a front elevation view of a mold end member of the constrained assembly.

FIG. **7** exemplarily illustrates a top perspective view showing a tension bearing member extending from one of the anchoring grooves created on the surface of the first object, via one of the mold end members of the constrained assembly.

FIG. **8** exemplarily illustrates a top plan view showing the tension bearing member extending from the anchoring groove via the mold end member shown in FIG. **7**.

FIG. **9** exemplarily illustrates a top plan view showing an embodiment of extending one of the tension bearing members from one of the anchoring grooves created on the surface of the first object, via one of the mold end members of the constrained assembly.

FIG. **10** exemplarily illustrates a top perspective view showing the tension bearing members extending from the anchoring grooves in opposing directions via the mold end members of the constrained assembly.

FIG. **11** exemplarily illustrates a top plan view showing an embodiment of extending the other tension bearing member from the other anchoring groove created on the surface of the first object, via the other mold end member.

FIG. **12** exemplarily illustrates a top perspective view showing a tensioning device generating tension in the extended tension bearing members.

FIG. **13** exemplarily illustrates a top perspective view showing mold side members positioned perpendicular to the mold end members and along a length of the constrained assembly on the surface of the first object to create the assembly shown in FIG. **2**.

FIG. **14** exemplarily illustrates a top plan view of an embodiment of the assembly shown in FIG. **2**.

FIG. **15** exemplarily illustrates a top perspective view showing pouring of a viscous liquid on the assembly comprising the constrained assembly, the extended tension bearing members, the anchoring grooves, and bolt assemblies positioned above the surface of the first object, for creating a molded attachment block.

FIGS. **16**A-**16**B exemplarily illustrate top perspective views of the molded attachment block created on curing of the poured viscous liquid shown in FIG. **15**, showing opposing ends of threaded members of the constrained assembly extending from the molded attachment block.

FIG. **17** exemplarily illustrates a top perspective view showing multiple molded attachment blocks created on a surface of a first object made of a first material for attaching to one or more second objects made of one or more second materials dissimilar to the first material of the first object.

FIG. **18** exemplarily illustrates a top perspective view of an embodiment of the assembly for creating a multi-tiered molded attachment block on a surface of a first object made of a first material for attaching to one or more second objects made of one or more second materials dissimilar to the first material of the first object.

DETAILED DESCRIPTION OF THE INVENTION

FIG. **1** illustrates a method for attaching a first object **201** exemplarily illustrated in FIGS. **2**-**4** and FIGS. **7**-**18**, made of a first material to one or more second objects made of one or more of multiple second materials dissimilar to the first material of the first object **201**, without any bonding material, for example, an adhesive, a chemical bonding material, etc., using a molded attachment block **1601** exemplarily illustrated in FIGS. **16**A-**16**B. As used herein, "first object" refers to any tangible article or item, for example, a tile, a block, a pipe, etc., made of a first material that can be attached to another object, that is, a second object made of a second material similar or dissimilar to the first material. The first object **201** is, for example, a flat object, a cylindrical object, or any object having a constant surface geometry. As used herein, "constant surface geometry" refers to a geometry where a surface is constant and uniform and does not have abrupt protrusions that preclude creation of the molded attachment block **1601** on a surface **201***a*, for example, a front surface or a rear surface of the first object **201** exemplarily illustrated in FIGS. **2**-**4** and FIGS. **7**-**18**. The first material of the first object **201** can be, for example, metal, wood, ceramic, stone, etc. Also, as used herein, "second object" refers to any tangible article, item, or external member made of a second material, that can be attached to the surface **201***a*, for example, the front surface or the rear surface of the first object **201**, for example, a tile made of a first material dissimilar to the second material of the second object using the molded attachment block **1601**. The second material of the second object can be, for example, metal, wood, ceramic stone, etc., that is dissimilar to the first material of the first object **201**.

The method disclosed herein is a mechanical method for attaching one or more second objects made of a material dissimilar to a material of the first object **201**, to the first object **201**, for example, a tile without using any bonding material. The method disclosed herein comprises attaching second objects, for example, metal, plastic parts such as brackets, hinges, etc., threaded members, wire deflector plates, etc., to a first object **201**, using a molded attachment block **1601** without marring the surface **201***a* of the first object **201** and the second objects in the process of assembly. For example, two or more first objects **201** can be attached together to construct a box. The method disclosed herein uses mechanical power and hand tools, for example, a tensioning device **226** and a pair of clamping devices **229** and **230** exemplarily illustrated in FIG. **2**, for facilitating attachment of second objects made of second materials dissimilar to a first material of a first object **201** to the surface **201***a* of the first object **201** without marring the surface **201***a* of the first object **201**. The method disclosed herein does not require use of glues or mortar for attaching second objects made of dissimilar materials to the surface **201***a* of the first object **201**.

The method disclosed herein comprises creating a molded attachment block **1601** from an assembly **200** comprising anchoring grooves **202** and **203** created on the surface **201***a* of the first object **201**, tension bearing members **204** and **205**, a constrained assembly **206**, mold side members **227** and **228**, and bolt assemblies **231** and **232** exemplarily illustrated in FIG. **2**, for attaching one or more second objects made of one or more second materials dissimilar to a first material of the first object **201**, to the surface **201***a* of the first object **201**. As used herein, "anchoring grooves" refer to structures on the surface **201***a* of the first object **201** used to anchor and secure the tension bearing members **204** and **205**, for example, metal wires or any wire that can sustain tension. In an embodiment, the tension bearing members **204** and **205** are wires made of metal, for example, aluminum, iron, steel, copper, etc., that can be extended to opposing sections **201***b* and **201***c* of the first object **201** from the anchoring grooves **203** and **202** respectively. The tension bearing members **204** and **205** are made of wires that sustain tension and resist an abrasive surface of a material of the first object **201** that the tension bearing members **204** and **205** contact. The strength of the tension bearing members **204** and **205** depends on loads of the first object **201** that are applied to the tension bearing members **204** and **205**. For example, the tension bearing members **204** and **205** in the molded attachment block **1601** created from the assembly **200** used in an architectural planter can hold about 120 pounds of tension which is sufficient to hold the architectural planter together. Also, as used herein, "constrained assembly" refers to an assembly that is constrained by the tension bearing members **204** and **205** on the surface **201***a* of the first object **201**. The constrained assembly **206** defines a location and structure of the molded block attachment **1601** on the surface **201***a* of the first object **201**. The mold side members **227** and **228** define the sides of the assembly **200**. The mold side members **227** and **228** are made of, for example, a plastic or coated metal.

In the method disclosed herein, the assembly **200** exemplarily illustrated in FIG. **2**, for creating the molded attachment block **1601** exemplarily illustrated in FIGS. **16**A-**16**B, is assembled as follows. Anchoring grooves **202** and **203** are created 101 at opposing sections **201***b* and **201***c* respectively, on the surface **201***a*, for example, the front surface or the rear surface of the first object **201** made of the first material. The tension bearing members **204** and **205** hook into the anchoring grooves **203** and **202** respectively. The anchoring grooves **202** and **203** anchor the tension bearing members **205** and **204** respectively, on the first object **201**. A constrained assembly **206** is positioned **102** proximal to the created anchoring grooves **202** and **203** at the opposing sections **201***b* and **201***c* on the surface **201***a* of the first object **201** respectively. The constrained assembly **206** comprises at least two wire deflector plates **216** and **217**, mold end members **208** and **211**, and the threaded members **214** and **215**, for example, threaded rods as exemplarily illustrated in FIG. **2**. The threaded members **214** and **215** of the constrained assembly **206** are positioned perpendicular to the anchoring grooves **202** and **203**. The two wire deflector plates **216** and **217** and then the mold end members **208** and **211** are positioned on the threaded members **214** and **215**.

The mold end members **208** and **211** comprise openings **209** and **212** and slits **210** and **213** respectively. The openings **209** of the mold end member **208** receive and perpendicularly engage ends **214***a* and **215***a* of the threaded members **214** and **215** exemplarily illustrated in FIG. **5**, respectively. The openings **212** of the mold end member **211** receive and perpendicularly engage ends **214***b* and **215***b* of the threaded members **214** and **215** respectively. The slits **210** and **213** of the mold end members **208** and **211** respectively, receive the tension bearing members **204** and **205** extending from the anchoring grooves **203** and **202** respectively, in opposing directions. The mold end members **208** and **211** are made of, for example, a plastic or coated metal. The wire deflector plates **216** and **217** are positioned parallel to the mold end members **208** and **211** and are connected to the threaded members **214** and **215** symmetrically about a central line **207**, that is, an imaginary line, between the mold end members **208** and **211** using at least four deflector connectors **218**, **219**, **220**, and **221** as exemplarily illustrated in FIG. **4**. In an embodiment as exemplarily illustrated in FIG. **18**, the constrained assembly **206** comprises at least two wire deflector threaded members **233** and **234**, for example, two wire deflector threaded rods that perform the function of the wire deflector plates **216** and **217** as disclosed in the detailed description of FIG. **18**.

After positioning the constrained assembly **206** proximal to the created anchoring grooves **202** and **203** at the opposing sections **201***b* and **201***c* on the surface **201***a* of the first object **201** respectively, the tension bearing members **204** and **205** are extended **103** from the created anchoring grooves **203** and **202** respectively, in opposing directions along a length of the constrained assembly **206** via the mold end members **208** and **211** respectively, that is, over the wire deflector plates **217** and **216** and through the slits **210** and **213** of the mold end members **208** and **211** respectively as exemplarily illustrated in FIG. **2** and FIGS. **7**-**15**. Using a tensioning device **226**, for example, a trigger clamp converted to a tensioning spreader as exemplarily illustrated in FIG. **2**, a tension is generated **104** in the extended tension bearing members **204** and **205** as disclosed in the detailed description of FIG. **12**. The tensioning device **226** pulls the tension bearing members **204** and **205** outwardly to generate a tension in the tension bearing members **204** and **205**. The tensioning device **226** simultaneously tensions both the tension bearing members **204** and **205**. With the tensioning device **226** straining the tension bearing members **204** and **205**, the mold side members **227** and **228** are positioned **105** perpendicular to the mold end members **208** and **211** of the constrained assembly **206** as exemplarily illustrated in FIG. **2** and FIGS. **13**-**15**. The mold side members **227** and **228** are positioned along the length of the constrained assembly **206** on the surface **201***a* of the first object **201**. The constrained assembly **206** is then constricted **106** between the mold side members **227** and **228** using clamping devices **229** and **230** that are removably positioned on the mold side members **227** and **228** as exemplarily illustrated in FIG. **2** and FIGS. **14**-**15**.

The extended tension bearing members **204** and **205** under the generated tension are clamped **107** between at least four bolt assemblies **231** and **232** respectively, exemplarily illustrated in FIG. **2** and FIGS. **14**-**15**, at any point within the constrained assembly **206** after the extended tension bearing members **204** and **205** are deflected by the wire deflector plates **217** and **216** respectively. The bolt assemblies **231** and **232** are positioned above the surface **201***a* of the first object **201** between the mold end members **208** and **211** of the constrained assembly **206**. The bolt assemblies **231** and **232** are positioned within the constrained assembly **206** for gripping the extended tension bearing members **204** and **205**, prior to inserting the ends **204***a*, **204***b* and **205***a*, **205***b* of the extended tension bearing members **204** and **205** respectively, through the slits **210** and **213** of the mold end members **208** and **211** respectively. A viscous liquid **1501** is poured as exemplarily illustrated in

FIG. **15**, and cured **108** on the constrained assembly **206**, the extended tension bearing members **204** and **205**, the anchoring grooves **202** and **203**, and the bolt assemblies **231** and **232** for creating the molded attachment block **1601** with the opposing ends **214***a*, **214***b* and **215***a*, **215***b* of the threaded members **214** and **215** of the constrained assembly **206** respectively, extending outwardly from the molded attachment block **1601** as exemplarily illustrated in FIG. **16**A. The viscous liquid **1501** is poured on the constrained assembly **206**, the extended tension bearing members **204** and **205**, the anchoring grooves **202** and **203**, and the bolt assemblies **231** and **232** and allowed to cure while tension is maintained in the extended tension bearing members **204** and **205** by the tensioning device **226**.

The ends **204***a*, **204***b* and **205***a*, **205***b* of the extended tension bearing members **204** and **205** respectively, that extend outwardly from the created molded attachment block **1601** in opposing directions, after curing of the viscous liquid **1501**, are then cut as exemplarily illustrated in FIG. **16**B. The constrained assembly **206** with the mold end members **208** and **211**, the extended tension bearing members **204** and **205**, the anchoring grooves **202** and **203**, the mold side members **227** and **228**, and the bolt assemblies **231** and **232** remain within the molded attachment block **1601**. In an embodiment, after curing of the viscous liquid **1501**, the mold side members **227** and **228** and the mold end members **208** and **211** are removed from the molded attachment block **1601** and the tension bearing members **204** and **205** that extend beyond the molded attachment block **1601** are cut. In this embodiment, the extended tension bearing members **204** and **205**, the anchoring grooves **202** and **203**, the bolt assemblies **231** and **232**, and the constrained assembly **206** without the mold end members **208** and **211** remain within the molded attachment block **1601**. In an embodiment, the mold side members **227** and **228** are removed from the molded attachment block **1601** and the constrained assembly **206** with the mold end members **208** and **211** are retained in the molded attachment block **1601** along with the extended tension bearing members **204** and **205**, the anchoring grooves **202** and **203**, and the bolt assemblies **231** and **232**. The extended opposing ends **214***a*, **214***b* and **215***a*, **215***b* of the threaded members **214** and **215** respectively, allow attachment of other second objects, for example, brackets, hinges, etc., made of the second materials dissimilar to the first material of the first object **201**, to the surface **201***a* of the first object **201** without any bonding material. In an embodiment, the mold end members **208** and **211**, the threaded members **214** and **215**, the wire deflector plates **216** and **217**, and the mold side members **227** and **228** are the second objects made of the second material that are attached to the first object **201** made of the first material. In the method disclosed herein, the tension in the tension bearing members **204** and **205** is preserved to produce a force that presses the molded attachment block **1601** against the surface **201***a* of the first object **201**, thereby allowing, for example, steel mechanical elements to be attached to non-metallic or other dissimilar materials.

In the method disclosed herein, the threaded members **214** and **215** are extended beyond the mold end members **208** and **211** of the molded attachment block **1601** for leveraging mechanical properties of the threaded members **214** and **215** for attaching other second objects, for example, hinges, brackets, etc., and other first objects to the first object **201**. In an embodiment, the threaded members **214** and **215** are used to attach the mold end members **208** and **211** to the molded attachment block **1601** so that the mold end members **208** and **211** remain within the molded attachment block **1601** after the viscous liquid **1501** is cured. In this embodiment, the threaded members **214** and **215**, the mold end members **208** and **211**, and the wire deflector plates **216** and **217** can be the second objects made of the second material that attach to the surface **201***a* of the first object **201** made of the first material. In an embodiment, the mold end members **208** and **211** retained within the molded attachment block **1601** after curing of the viscous liquid **1501**, are extended beyond the molded attachment block **1601** for leveraging mechanical properties of the second material of the mold end members **208** and **211** to attach other second objects, for example, hinges, brackets, etc., to the first object **201**. In another embodiment, the wire deflector plates **216** and **217** are extended, for example, from sides of the molded attachment block **1601** for leveraging mechanical properties of the second material of the wire deflector plates **216** and **217** to attach other second objects, for example, hinges, brackets, etc., to the first object **201**. In another embodiment, the threaded members **214** and **215** span multiple molded attachment blocks **1601** that are located on multiple different first objects for mechanically joining the first objects.

The method disclosed herein can be used for constructing any form of an assembly, for example, architectural planters of multiple shapes, retaining walls or similar structures, wall cladding structures, furniture items such as chests, bookcases, benches, tables, kitchen cabinets, etc. In an embodiment, retaining walls (not shown) constructed by attaching a first object **201** to another first object (not shown), using multiple molded attachment blocks **1601** created on the first objects, by the method disclosed herein can withstand weather seismic occurrences better than conventional masonry structures. These retaining walls can withstand weather seismic occurrences due to the inherent flexibility of the tension bearing members **204** and **205** of the molded attachment blocks **1601** used in the retaining walls. In an embodiment, in the construction of wall cladding structures (not shown), a first object **201** can be directly bolted to wall studs using the molded attachment block **1601** disclosed herein rather than attaching the first object **201** to an interior wall using bonding materials such as glue, adhesives, etc.

Assembling a first object **201** allows modular construction and allows the first object **201** and the second objects to be attached mechanically using the molded attachment block **1601**. One or more objects comprising the first object **201** and the second objects can be attached together to build a large and complex structure. For example, a person can avoid hiring a mason to construct an architectural planter and instead can buy a kit comprising multiple first objects **201** with the molded attachment blocks **1601** disclosed herein, that can be attached together using second objects to construct the architectural planter structure with minimal skill.

FIG. **2** exemplarily illustrates a top perspective view of an assembly **200** for creating a molded attachment block **1601** exemplarily illustrated in FIGS. **16**A-**16**B, on a surface **201***a* of a first object **201** made of a first material for attaching to one or more second objects made of one or more second materials. The assembly **200** comprising the anchoring grooves **202** and **203** created at opposing sections **201***b* and **201***c* on the surface **201***a* of the first object **201** respectively, the constrained assembly **206**, the extended tension bearing members **204** and **205**, the mold side members **227** and **228**, and the bolt assemblies **231** and **232** is positioned on the surface **201***a* of the first object **201** as exemplarily illustrated in FIG. **2**. The molded attachment block **1601** is created on curing of the viscous liquid **1501** poured on the assembly **200** as exemplarily illustrated in FIG. **15**. The molded

attachment block **1601** is used to attach second objects made of one or more second materials, for example, steel, to the first object **201**, for example, a tile made of a first material such as a ceramic material.

The constrained assembly **206** comprises a pair of mold end members **208** and **211** that define limits of the molded attachment block **1601**, a pair of threaded members **214** and **215**, for example, threaded rods, and a pair of wire deflector plates **216** and **217** that are connected to the threaded members **214** and **215** using at least four deflector connectors **218**, **219**, **220**, and **221**. The mold end members **208** and **211** comprise slits **210** and **213** and openings **209** and **212** respectively, as disclosed in the detailed description of FIG. **1**. The tension bearing members **204** and **205** are anchored in the anchoring grooves **203** and **202** respectively and extended via the slits **210** and **213** in the mold end members **208** and **211** respectively, in opposing directions as exemplarily illustrated in FIGS. **7-15**. The threaded members **214** and **215** engage with the mold end members **208** and **211** at the openings **209** and **212** of the mold end members **208** and **211** respectively, via mold end connectors **222**, **223**, **224**, and **225** as disclosed in the detailed description of FIG. **5**. The tensioning device **226** pulls the tension bearing members **204** and **205** that extend in opposing directions to generate the tension in the extended tension bearing members **204** and **205**. The mold side members **227** and **228** are positioned perpendicular to the mold end members **208** and **211**. The mold side members **227** and **228** are positioned on opposing sides of the constrained assembly **206** along the length of the constrained assembly **206** to constrict the constrained assembly **206** using the clamping devices **229** and **230**. The four bolt assemblies **231** and **232** comprising bolt members **231***a* and **232***a*, nuts **231***d* and **232***d*, and washers **231***b*, **231***c* and **232***b*, **232***c* respectively exemplarily illustrated in FIG. **15**, grip the extended tension bearing members **204** and **205** to hold the generated tension in the extended tension bearing members **204** and **205** after the viscous liquid **1501** poured on the assembly **200** cures and hardens. The bolt assemblies **231** and **232** preclude the extended tension bearing members **204** and **205** from moving within the viscous liquid **1501** after the viscous liquid **1501** hardens to form the molded attachment block **1601** exemplarily illustrated in FIGS. **16**A-**16**B.

The steps of the method disclosed in the detailed description of FIG. **1** above are exemplarily illustrated in FIGS. **3-15** and disclosed below for creation of the molded attachment block **1601** exemplarily illustrated in FIGS. **16**A-**16**B.

FIG. **3** exemplarily illustrates a top plan view of a first object **201** made of a first material, showing the anchoring grooves **202** and **203** created at opposing sections **201***b* and **201***c* respectively, on the surface **201***a* of the first object **201**. The locations of the anchoring grooves **202** and **203** on the surface **201***a* of the first object **201**, for example, a tile, are selected based on the position of the molded attachment block **1601** exemplarily illustrated in FIGS. **16**A-**16**B, to be created on the surface **201***a* of the first object **201**. The anchoring grooves **202** and **203** are created at locations symmetrical about a central line **207**, that is, an imaginary line, between the mold end members **208** and **211** of the constrained assembly **206**. The anchoring grooves **202** and **203** are identical and symmetrical about the central line **207** between the mold end members **208** and **211** and are positioned to lie within the molded attachment block **1601** to be created. That is, the anchoring grooves **202** and **203** are mirror images of each other about the central line **207**. The anchoring grooves **202** and **203** are cut into the surface **201***a* of the first object **201** such that the anchoring grooves **202** and **203** are centered and fit inside the molded attachment block **1601**. The anchoring grooves **202** and **203** are confined to an area of the molded attachment block **1601**. In an embodiment, each of the anchoring grooves **202** and **203** is U-shaped. That is, the anchoring grooves **202** and **203** comprise linear sections **202***a* and **203***a* respectively, and two perpendicular sections **202***b*, **202***c* and **203***b*, **203***c* that extend from the linear sections **202***a* and **203***a* respectively. The anchoring grooves **202** and **203** are created by cutting the surface **201***a* of the first object **201** using a cutter (not shown). The cutter is held perpendicular to the surface **201***a* of the first object **201** for cutting the perpendicular sections **202***b*, **202***c* and **203***b*, **203***c* of the anchoring grooves **202** and **203** respectively, into the surface **201***a* of the first object **201**. The cutter is held at a vertical angle of, for example, less than 45 degrees with respect to the surface **201***a* of the first object **201** for cutting the linear sections **202***a* and **203***a* of the anchoring grooves **202** and **203** respectively, into the surface **201***a* of the first object **201**, resulting in the creation of tabs **202***d* and **203***d* at the anchoring grooves **202** and **203** respectively. The linear sections **202***a* and **203***a* of the anchoring grooves **202** and **203** respectively, are cut parallel to the central line **207**. The tabs **202***d* and **203***d* created by cutting the linear sections **202***a* and **203***a* of the anchoring grooves **202** and **203** respectively, are used for anchoring the tension bearing members **205** and **204** respectively, as exemplarily illustrated in FIGS. **7-15**. The length of the tension bearing members **204** and **205** anchored in the anchoring grooves **203** and **202** respectively, is dependent on depths of the linear sections **203***a* and **202***a* of the anchoring grooves **203** and **202** respectively. For a first object **201**, for example, a thin tile, the depth of the anchoring grooves **202** and **203** is, for example, an eighth of an inch, that is, **0.125"**.

FIG. **4** exemplarily illustrates a top perspective view showing the constrained assembly **206** positioned on the surface **201***a* of the first object **201**. The constrained assembly **206** comprising the mold end members **208** and **211**, the threaded members **214** and **215**, and the wire deflector plates **216** and **217** is positioned proximal to the anchoring grooves **202** and **203** created at the opposing sections **201***b* and **201***c* respectively, on the surface **201***a* of the first object **201** exemplarily illustrated in FIG. **3**. The anchoring grooves **202** and **203** are contained between the mold end members **208** and **211** as exemplarily illustrated in FIG. **4**. The distance between the mold end members **208** and **211** is greater than the distance between the anchoring grooves **202** and **203** created on the surface **201***a* of the first object **201**. The mold end members **208** and **211** are positioned parallel to the anchoring grooves **202** and **203**. The mold end members **208** and **211** are identical and symmetrical about the central line **207**. The mold end members **208** and **211** comprise slits **210** and **213** for receiving the tension bearing members **204** and **205** respectively, and openings **209** and **212** for engaging the ends **214***a*, **215***a* and **214***b*, **215***b* of the threaded members **214** and **215**, using at least four mold end connectors **222**, **223**, **224**, and **225** as exemplarily illustrated in FIG. **4**.

The threaded members **214** and **215** of the constrained assembly **206** are positioned and connected perpendicular to the mold end members **208** and **211**. The threaded members **214** and **215** are positioned parallel to each other. The threaded members **214** and **215** are structural members, for example, reinforcement bars, rectangular tubes, round tubes, round bars, rectangular bars, channels, angles, etc., made of, for example, steel. The openings **209** and **212** in the mold end members **208** and **211** are located such that the threaded members **214** and **215**, when engaged with the mold end members **208** and **211**, are equidistant from the anchoring

grooves **202** and **203**. That is, the anchoring grooves **202** and **203** are positioned at locations equidistant from both the threaded members **214** and **215** of the constrained assembly **206**. The wire deflector plates **216** and **217** of the constrained assembly **206** are connected to the threaded members **214** and **215** equidistant from the central line **207** between the mold end members **208** and **211**. The wire deflector plates **216** and **217** are connected to the threaded members **214** and **215** using the deflector connectors **218**, **219**, **220**, and **221** as exemplarily illustrated in FIG. **4**. The distance between the wire deflector plates **216** and **217** is selected based on the size of the molded attachment block **1601** exemplarily illustrated in FIGS. **16**A-**16**B, to be created. As exemplarily illustrated in FIG. **4**, the wire deflector plates **216** and **217** are positioned close to each other to create a small molded attachment block **1601**.

FIG. **5** exemplarily illustrates an exploded view of the constrained assembly **206** used for creating the molded attachment block **1601** exemplarily illustrated in FIGS. **16**A-**16**B. As exemplarily illustrated in FIG. **5**, the constrained assembly **206** comprises a pair of threaded members **214** and **215**, a pair of wire deflector plates **216** and **217**, a pair of mold end members **208** and **211**, the deflector connectors **218**, **219**, **220**, and **221** exemplarily illustrated in FIG. **4**, and the mold end connectors **222**, **223**, **224**, and **225** exemplarily illustrated in FIG. **4**. The mold end member **208** comprises a pair of openings **209** for receiving the threaded members **214** and **215** via the ends **214***a* and **215***a* of the threaded members **214** and **215** respectively, and a pair of slits **210** for receiving the tension bearing member **204** from the anchoring groove **203** as exemplarily illustrated in FIG. **7**. The mold end member **211** comprises a pair of openings **212** for receiving the threaded members **214** and **215** via the ends **214***b* and **215***b* of the threaded members **214** and **215** respectively, and a pair of slits **213** for receiving the other tension bearing member **205** extending from the anchoring groove **202** as exemplarily illustrated in FIG. **10**. The openings **209** and **212** and the slits **210** and **213** in the mold end members **208** and **211** respectively, are symmetrical about centers of the mold end members **208** and **211**. The wire deflector plates **216** and **217** of the constrained assembly **206** are centrally connected to the threaded members **214** and **215** using the deflector connectors **218**, **219**, **220**, and **221**. The deflector connectors **218** and **219** comprising nuts **218***a*, **218***d*, and **219***a*, **219***d* respectively, and washers **218***b*, **218***c*, and **219***b*, **219***c* respectively, connect the wire deflector plate **216** to the threaded members **214** and **215** respectively. That is, the wire deflector plate **216** is connected to the threaded member **214** using the nuts **218***a* and **218***d* and the washers **218***b* and **218***c* on both sides of the wire deflector plate **216** as exemplarily illustrated in FIG. **5**. Moreover, the wire deflector plate **216** is connected to the threaded member **215** using the nuts **219***a* and **219***d* and the washers **219***b* and **219***c* on both sides of the wire deflector plate **216** as exemplarily illustrated in FIG. **5**. Similarly, the deflector connectors **220** and **221** comprising nuts **220***a*, **220***d*, and **221***a*, **221***d* respectively, and washers **220***b*, **220***c*, and **221***b*, **221***c* respectively, connect the wire deflector plate **217** to the threaded members **214** and **215** respectively. That is, the wire deflector plate **217** is connected to the threaded member **214** using the nuts **220***a* and **220***d* and the washers **220***b* and **220***c* on both sides of the wire deflector plate **217** as exemplarily illustrated in FIG. **5**. Moreover, the wire deflector plate **217** is connected to the threaded member **215** using the nuts **221***a* and **221***d* and the washers **221***b* and **221***c* on both sides of the wire deflector plate **217** as exemplarily illustrated in FIG. **5**.

Each of the wire deflector plates **216** and **217** comprises a plate section **216***a* and **217***a* and a pair of wing sections **216***b*, **216***c* and **217***b*, **217***c* extending from the respective plate sections **216***a* and **217***a*. The wing sections **216***b*, **216***c* and **217***b*, **217***c* of the wire deflector plates **216** and **217** respectively, comprise openings **216***d* and **217***d* to receive the threaded members **214** and **215** respectively, and the corresponding deflector connectors **218**, **219**, **220**, and **221**. The threaded members **214** and **215** engage with the mold end members **208** and **211** via the openings **209** and **212** of the mold end members **208** and **211** respectively, using the mold end connectors **222**, **223**, **224**, and **225**. The mold end connectors **222** and **223** comprising nuts **222***a*, **222***d*, and **223***a*, **223***d* respectively, and washers **222***b*, **222***c*, and **223***b*, **223***c* respectively, connect the mold end member **208** to the threaded members **214** and **215** respectively. That is, the mold end member **208** is connected to the threaded member **214** using the nuts **222***a* and **222***d* and the washers **223***b* and **223***c* on both sides of the mold end member **208** as exemplarily illustrated in FIG. **5**. Moreover, the mold end member **208** is connected to the threaded member **215** using the nuts **223***a* and **223***d* and the washers **223***b* and **223***c* on both sides of the mold end member **208** as exemplarily illustrated in FIG. **5**. Similarly, the mold end connectors **224** and **225** comprising nuts **224***a*, **224***d*, and **225***a*, **225***d* respectively, and washers **224***b*, **224***c*, and **225***b*, **225***c* respectively, connect the mold end member **211** to the threaded members **214** and **215** respectively. That is, the mold end member **211** is connected to the threaded member **214** using the nuts **224***a* and **224***d* and the washers **224***b* and **224***c* on both sides of the mold end member **211** as exemplarily illustrated in FIG. **5**. Moreover, the mold end member **211** is connected to the threaded member **215** using the nuts **225***a* and **225***d* and the washers **225***b* and **225***c* on both sides of the mold end member **211** as exemplarily illustrated in FIG. **5**.

The constrained assembly **206** is assembled as follows: The location of connection of the mold end members **208** and **211** to the threaded members **214** and **215** is determined. The wire deflector plates **216** and **217** with their respective wing sections **216***b*, **216***c* and **217***b*, **217***c* are aligned parallel to the mold end members **208** and **211** and are positioned symmetrically about the central line **207** between the mold end members **208** and **211**. The nuts **218***a*, **219***a*, **220***a*, and **221***a* and the washers **218***b*, **219***b*, **220***b*, and **221***b* are engaged with the threaded members **214** and **215** prior to positioning the wire deflector plates **216** and **217** on the threaded members **214** and **215**. The wire deflector plates **216** and **217** are then positioned on the threaded members **214** and **215** through their respective openings **216***d* and **217***d*. The washers **218***c*, **219***c*, **220***c*, and **221***c* and the nuts **218***d*, **219***d*, **220***d*, and **221***d* are then positioned to succeed the wire deflector plates **216** and **217** on the threaded members **214** and **215** as exemplarily illustrated in FIG. **4**. The mold end member **208** is positioned proximal to the ends **214***a* and **215***a* of the threaded members **214** and **215** respectively, via the openings **209** of the mold end member **208** at the predetermined location on the threaded members **214** and **215**. Similarly, the mold end member **211** is positioned proximal to the ends **214***b* and **215***b* of the threaded members **214** and **215** respectively, via the openings **212** of the mold end member **211** at the predetermined location on the threaded members **214** and **215**. The nuts **222***a*, **223***a*, **224***a*, and **225***a* and the washers **222***b*, **223***b*, **224***b*, and **225***b* are positioned to precede the mold end members **208** and **211** on the threaded members **214** and **215** as exemplarily illustrated in FIG. **4**. The washers **222***c*, **223***c*, **224***c*, and **225***c* and the nuts **222***d*, **223***d*, **224***d*, and **225***d* are

positioned to succeed the mold end members **208** and **211** on the threaded members **214** and **215** as exemplarily illustrated in FIG. **4**. The threaded members **214** and **215** are inserted through the openings **209** and **212** in the mold end members **208** and **211** respectively, and the mold end members **208** and **211** are positioned at predetermined locations about the central line **207** on the threaded members **214** and **215** such that the distance between the mold end members **208** and **211** is greater than the distance between the anchoring grooves **202** and **203**.

In an embodiment, the nuts **218***a* and **218***d*, **219***a* and **219***d*, **220***a* and **220***d*, and **221***a* and **221***d*, and the washers **218***b* and **218***c*, **219***b* and **219***c*, **220***b* and **220***c*, and **221***b* and **221***c* of the deflector connectors **218**, **219**, **220**, and **221** respectively, and the nuts **222***a*, **223***a*, **224***a*, and **225***a* and the washers **222***b*, **223***b*, **224***b*, and **225***b* of the mold end connectors **222**, **223**, **224**, and **225** respectively, are absent and only the nuts **222***d*, **223***d*, **224***d*, and **225***d* and the washers **222***c*, **223***c*, **224***c*, and **225***c* of the mold end connectors **222**, **223**, **224**, and **225** respectively, are positioned and engaged on the threaded members **214** and **215**. In this embodiment, the nuts **222***d*, **223***d*, **224***d* and **225***d* and the washers **222***c*, **223***c*, **224***c*, and **225***c* of the mold end connectors **222**, **223**, **224**, and **225** respectively, are retained to maintain the position of the mold end members **208** and **211** when the viscous liquid **1501** is poured on the constrained assembly **206**, the anchoring grooves **202** and **203**, and the tension bearing members **204** and **205** as exemplarily illustrated in FIG. **15**, for creation of the molded attachment block **1601**. In an embodiment, the wire deflector plates **216** and **217** are connected to the threaded members **214** and **215** by welding. In another embodiment, the wire deflector plates **216** and **217** are connected to the threaded members **214** and **215** by soldering. In another embodiment, the wire deflector plates **216** and **217** are connected to the threaded members **214** and **215** by using a bonding material, for example, an adhesive such as glue. The tension bearing members **204** and **205**, when under tension, push down on the wire deflector plates **216** and **217**, thereby holding the wire deflector plates **216** and **217** in position. The wire deflector plates **216** and **217** positioned on the threaded members **214** and **215** using the deflector connectors **218**, **219**, **220**, and **221** support and deflect the tension bearing members **204** and **205**. The thinness of the wire deflector plates **216** and **217** prevent the wire deflector plates **216** and **217** from moving along longitudinal axes of the threaded members **214** and **215**.

The mold end members **208** and **211** are made of a metallic material. For the first object **201**, for example, a tile, made of a ceramic material, the mold end members **208** and **211** made of the metallic material are positioned on the threaded members **214** and **215**. The mold end members **208** and **211** made of the metallic material ensure the viscous liquid **1501** poured on the constrained assembly **206**, the anchoring grooves **202** and **203**, and the tension bearing members **204** and **205** as exemplarily illustrated in FIG. **15**, does not melt the mold end members **208** and **211** since the mold end members **208** and **211** are removed from the molded attachment block **1601**, after curing of the viscous liquid **1501**. In an embodiment where the viscous liquid **1501** to be poured into the assembly **200** exemplarily illustrated in FIG. **2**, is concrete or soap, a non-stick coating is applied on inner surfaces **208***a* and **211***a* of the mold end members **208** and **211** respectively, for easy removal of the mold end members **208** and **211** from the molded attachment block **1601** on curing of the viscous liquid **1501**. In an embodiment, the tension bearing members **204** and **205** are under a substantially high tension. To hold the tension bearing members **204** and **205** under the substantially high tension, the mold end members **208** and **211** are configured to be L-shaped (not shown). Each of the L-shaped mold end members comprises a horizontal plate section (not shown) positioned in contact with the surface **201***a* of the first object **201** and a vertical plate section (not shown) that functions as a mold end member **208** or **211**. The horizontal plate sections of the L-shaped mold end members distribute a resulting force of substantially high tensions in the tension bearing members **204** and **205** over a large area of the first object **201**.

FIG. **6**A exemplarily illustrates a front elevation view of a wire deflector plate **216** of the constrained assembly **206** exemplarily illustrated in FIG. **4**. The wire deflector plate **216** comprises a plate section **216***a* and a pair of wing sections **216***b* and **216***c* extending from opposing sides **216***e* and **216***f* of the plate section **216***a* respectively. The plate section **216***a* receives the tension bearing members **204** and **205** under tension and supports and deflects the tension bearing members **204** and **205** under tension. The wing sections **216***b* and **216***c* of the wire deflector plate **216** are connected to the threaded members **214** and **215** via the openings **216***d* of the wire deflector plate **216** as exemplarily illustrated in FIGS. **4-5**, using the deflector connectors **218** and **219** as exemplarily illustrated in FIG. **4**. The wing sections **216***b* and **216***c* of the wire deflector plate **216** that are engaged with the threaded members **214** and **215** respectively, via the openings **216***d* of the wire deflector plate **216** as exemplarily illustrated in FIG. **4**, hold the wire deflector plate **216** in place when the tension bearing members **204** and **205** are extended from the anchoring grooves **203** and **202** respectively, as exemplarily illustrated in FIG. **10**. Thickness of the plate section **216***a* and the wing sections **216***b* and **216***c* of the wire deflector plate **216** is configured based on the tension borne in the tension bearing members **204** and **205**. The structure and function of the other wire deflector plate **217** exemplarily illustrated in FIGS. **4-5**, is similar to the structure and function of the wire deflector plate **216** disclosed herein. The wing sections **217***b* and **217***c* of the wire deflector plate **217** are connected to the threaded members **214** and **215** via the openings **217***d* of the wire deflector plate **217** as exemplarily illustrated in FIGS. **4-5**, using the deflector connectors **220** and **221** as exemplarily illustrated in FIG. **4**.

FIG. **6**B exemplarily illustrates a front elevation view of a mold end member **208** of the constrained assembly **206** exemplarily illustrated in FIG. **4**. The mold end member **208** comprises a pair of slits **210** for receiving the tension bearing member **204** and a pair of openings **209** for connecting the mold end member **208** to the threaded members **214** and **215** as exemplarily illustrated in FIG. **7**. The mold end member **208** is inserted onto the threaded members **214** and **215** via the openings **209** of the mold end member **208** exemplarily illustrated in FIG. **5** and is connected to the threaded members **214** and **215** using the mold end connectors **222** and **223** as exemplarily illustrated in FIG. **4**. The structure and function of the other mold end member **211** exemplarily illustrated in FIGS. **4-5**, is similar to the structure and function of the mold end member **208** disclosed herein. The mold end member **211** is inserted onto the threaded members **214** and **215** via the openings **212** of the mold end member **211** exemplarily illustrated in FIG. **5** and is connected to the threaded members **214** and **215** using the mold end connectors **224** and **225** as exemplarily illustrated in FIG. **4**. The mold end members **208** and **211** are positioned to contact the surface **201***a* of the first object **201** exemplarily illustrated in

FIG. **4**. The mold end members **208** and **211** are configured as legs of the constrained assembly **206**.

FIGS. **7-8** exemplarily illustrate a top perspective view and a top plan view respectively, showing a tension bearing member **204** extending from the anchoring groove **203** created on the surface **201***a* of the first object **201**, via the mold end member **208** of the constrained assembly **206**. After the anchoring grooves **202** and **203** are created on the surface **201***a* of the first object **201** and the constrained assembly **206** is positioned on the surface **201***a* of the first object **201** as exemplarily illustrated in FIGS. **3-4**, the tension bearing member **204** is anchored in the tab **203***d* of the anchoring groove **203** created by cutting the linear section **203***a* and the perpendicular sections **203***b* and **203***c* of the anchoring groove **203** exemplarily illustrated in FIG. **3**. The tension bearing member **204** is looped around the tab **203***d* of the anchoring groove **203** and extended to pass over the wire deflector plates **217** and **216** and then through the slits **210** in the mold end member **208** along the length of the threaded members **214** and **215** of the constrained assembly **206**. The ends **204***a* and **204***b* of the tension bearing member **204** extend beyond the mold end member **208**. The tension bearing member **204** is threaded over the pair of wire deflector plates **217** and **216** prior to passing through the slits **210** in the mold end member **208**. The tension bearing member **204** is anchored in the anchoring groove **203** at the opposing section **201***c* of the surface **201***a* of the first object **201** and extended in an opposing direction as exemplarily illustrated in FIGS. **7-8**.

FIG. **9** exemplarily illustrates a top plan view showing an embodiment of extending the tension bearing member **204** from the anchoring groove **203** created on the surface **201***a* of the first object **201**, via the mold end member **208** of the constrained assembly **206**. In an embodiment, the anchoring grooves **202** and **203** are cut with a shallow depth in the first object **201**. As exemplarily illustrated in FIG. **9**, the tension bearing member **204** is anchored in the anchoring groove **203** where the depth of the anchoring groove **203** is shallow. For example, the tension bearing member **204** is engaged with the side of the tab **203***d* for about a sixteenth of an inch, that is, **0.06"**, because the depth of the anchoring groove **203** is merely an eighth of an inch, that is, **0.125"**. The tension bearing member **204** is threaded over the pair of wire deflector plates **217** and **216** and passed through the slits **210** in the mold end member **208**. In this embodiment, the wire deflector plates **216** and **217** are spaced a distance apart symmetrically about the central line **207** between the mold end members **208** and **211**. The distance between the wire deflector plates **216** and **217** is selected based on the size of the molded attachment block **1601** exemplarily illustrated in FIGS. **16**A-**16**B, to be created. As exemplarily illustrated in FIG. **9**, the wire deflector plates **216** and **217** are separated by a distance for creating a long molded attachment block **1601**.

FIG. **10** exemplarily illustrates a top perspective view showing the tension bearing members **204** and **205** extending from the anchoring grooves **203** and **202** in opposing directions via the mold end members **208** and **211** of the constrained assembly **206** respectively. After the tension bearing member **204** is anchored in the anchoring groove **203** and extended from the anchoring groove **203** in one direction to pass through the slits **210** of the mold end member **208**, the tension bearing member **205** is anchored in the anchoring groove **202** and extended from the anchoring groove **202** in an opposing direction to pass through the slits **213** of the mold end member **211** in a manner similar to extending the tension bearing member **204** anchored in the anchoring groove **203** exemplarily illustrated in FIGS. **7-8**. The tension bearing member **205** is anchored in the tab **202***d* of the anchoring groove **202** created by cutting the linear section **202***a* and the perpendicular sections **202***b* and **202***c* of the anchoring groove **202** exemplarily illustrated in FIG. **3**. The tension bearing member **205** is looped around the tab **202***d* of the anchoring groove **202** and extended to pass over the wire deflector plates **216** and **217** and then through the slits **213** in the mold end member **211** along the length of the threaded members **214** and **215** of the constrained assembly **206**. The tension bearing member **205** is anchored by the tab **202***d* of the anchoring groove **202** at the opposing section **201***b* on the surface **201***a* of the first object **201** and extended in a direction opposing the direction of extension of the tension bearing member **204** as exemplarily illustrated in FIG. **10**. The ends **205***a* and **205***b* of the tension bearing member **205** extend beyond the mold end member **211**. The tension bearing member **205** is threaded over the pair of wire deflector plates **216** and **217** and passed through the slits **213** in the mold end member **211**.

As the tension bearing member **204** extends from the anchoring groove **203** to pass through the slits **210** in the mold end member **208**, the tension bearing member **204** circumscribes the tension bearing member **205** that extends from the anchoring groove **202** to pass through the slits **213** in the mold end member **211**. As exemplarily illustrated in FIG. **10**, a portion of the tension bearing member **205** from the anchoring groove **202** to the wire deflector plates **216** and **217** is positioned underneath the opposing tension bearing member **204** from the anchoring groove **203**. That is, a portion of the tension bearing member **205** is positioned physically below a portion of the tension bearing member **204** that is between the wire deflector plate **216** and the mold end member **208**. The portion of the tension bearing member **205** that emerges from the anchoring groove **202** and encounters the wire deflector plate **216** is positioned below the other tension bearing member **204**. Conversely, a portion of the tension bearing member **204** while leaving the wire deflector plate **217** and continuing towards the slits **210** in the mold end member **208** is positioned above the other tension bearing member **205**. Similarly, the portion of the tension bearing member **204** that emerges from the anchoring groove **203** and encounters the wire deflector plate **217** is positioned below the other tension bearing member **205**. Conversely, a portion of the tension bearing member **205** while leaving the wire deflector plate **216** and continuing towards the slits **213** in the mold end member **211** is positioned above the other tension bearing member **204**. The ends **204***a* and **204***b* of the tension bearing member **204** extending beyond the mold end member **208** are tied together. Similarly, the ends **205***a* and **205***b* of the tension bearing member **205** extending beyond the mold end member **211** are tied together. The tension bearing members **204** and **205** extend from the anchoring grooves **203** and **202** respectively, in opposing directions along the length of the constrained assembly **206**.

FIG. **11** exemplarily illustrates a top plan view showing an embodiment of extending the other tension bearing member **205** from the other anchoring groove **202** created on the surface **201***a* of the first object **201**, via the other mold end member **211**. In this embodiment similar to the embodiment exemplarily illustrated in FIG. **9**, the anchoring grooves **202** and **203** are cut with a shallow depth in the first object **201**. As exemplarily illustrated in FIG. **11**, the tension bearing member **205** is anchored in the anchoring groove **202** that is shallow. For example, the tension bearing member **205** is engaged with the sides of the tab **202***d* for about a sixteenth

of an inch, that is, **0.06"**, because the depth of the anchoring groove **202** is merely an eighth of an inch, that is, **0.125"**. The tension bearing member **205** is threaded over the pair of wire deflector plates **216** and **217** and passed through the slits **213** in the mold end member **211**. In this embodiment, the wire deflector plates **216** and **217** are spaced a large distance apart about the central line **207** between the mold end members **208** and **211** as disclosed in the detailed description of FIG. **9**.

FIG. **12** exemplarily illustrates a top perspective view showing a tensioning device **226** generating tension in the extended tension bearing members **204** and **205**. The tensioning device **226** is, for example, a trigger clamp as exemplarily illustrated in FIG. **12**. The tensioning device **226** comprises two jaws, namely, a movable jaw **226***a* and a stationary jaw **226***b*, and a rail **226***c*. The movable jaw **226***a* and the stationary jaw **226***b* are positioned perpendicular to the rail **226***c* of the tensioning device **226**. The movable jaw **226***a* of the tensioning device **226** slides along the rail **226***c* of the tensioning device **226**. The stationary jaw **226***b* of the tensioning device **226** is statically attached to the rail **226***c*. The ends **204***a* and **204***b* of the tension bearing member **204** are tied and looped around the movable jaw **226***a* of the tensioning device **226** proximal to the opposing section **201***b* of the first object **201**. The ends **205***a* and **205***b* of the tension bearing member **205** are tied and looped around the stationary jaw **226***b* of the tensioning device **226** proximal to the opposing section **201***c* of the first object **201**. With a press of a quick release lever button **226***d* of the tensioning device **226**, the movable jaw **226***a* of the tensioning device **226** can be moved and slid towards the stationary jaw **226***b*. A press of a trigger button **226***e* of the tensioning devices **226** moves the movable jaw **226***a* away from the stationary jaw **226***b*.

With each press of the trigger button **226***e* of the tensioning device **226**, the stationary jaw **226***b* and the movable jaw **226***a* move further apart from each other. As the distance between the stationary jaw **226***b* and the movable jaw **226***a* is increased, the tension bearing members **204** and **205** are pulled in opposing directions, thereby generating a tension in the tension bearing members **204** and **205**. The tension bearing members **204** and **205** under the generated tension exert a downward pressure on the wire deflector plates **216** and **217** of the constrained assembly **206**, thereby positioning the constrained assembly **206** firmly on the first object **201**. The downward pressure on the wire deflector plates **216** and **217** tends to incline the mold end members **208** and **211** inwardly towards the anchoring grooves **202** and **203** respectively. The amount of inclination of the mold end members **208** and **211** inwardly towards the anchoring grooves **202** and **203** respectively, is a function of the thickness of the mold end members **208** and **211** and size of the openings **209** and **212** in the mold end members **208** and **211** respectively, that engage the threaded members **214** and **215**. The inclination of the mold end members **208** and **211** is mitigated by the pair of mold side members **227** and **228** positioned on the surface **201***a* of the first object **201** perpendicular to the mold end members **208** and **211** of the constrained assembly **206** as exemplarily illustrated in FIG. **13**.

FIG. **13** exemplarily illustrates a top perspective view showing the mold side members **227** and **228** positioned perpendicular to the mold end members **208** and **211** and along the length of the constrained assembly **206** on the surface **201***a* of the first object **201** to create the assembly **200** shown in FIG. **2**. The mold side members **227** and **228** are positioned perpendicular to the mold end members **208** and **211** and are positioned along the length of the constrained assembly **206**. The mold side members **227** and **228** are longer in length than the distance between the mold end members **208** and **211** on the surface **201***a* of the first object **201**. The mold side members **227** and **228** are made of a metallic material. In an embodiment where the viscous liquid **1501** to be poured into the assembly **200** exemplarily illustrated in FIG. **15**, is concrete or soap, a non-stick coating is applied on inner surfaces **227***d* and **228***d* of the mold side members **227** and **228** facing the threaded members **214** and **215** respectively, for easy removal of the mold side members **227** and **228** from the molded attachment block **1601** exemplarily illustrated in FIGS. **16**A-**16**B, after the viscous liquid **1501** cures and hardens. In an embodiment, a metallic material cover (not shown) is attached to the mold end members **208** and **211** and/or the mold side members **227** and **228**. In an embodiment, the mold side members **227** and **228** are of the same height as the mold end members **208** and **211**. The mold side members **227** and **228** constrict the constrained assembly **206** using the clamping devices **229** and **230** removably positioned on the mold side members **227** and **228** as exemplarily illustrated in FIG. **2** and as disclosed in the detailed description of FIG. **14**. The clamping devices **229** and **230** are, for example, trigger clamps. In an embodiment, the clamping devices **229** and **230** temporarily attach the mold side members **227** and **228** to the mold end members **208** and **211**.

FIG. **14** exemplarily illustrates a top plan view of an embodiment of the assembly **200** shown in FIG. **2**. As exemplarily illustrated in FIG. **14**, the tension bearing members **204** and **205** are anchored in the anchoring grooves **203** and **202** respectively and engage the sides of the tabs **203***d* and **202***d* of the anchoring grooves **203** and **202** respectively, for example, for merely a sixteenth of an inch, because the depth of the anchoring grooves **203** and **202** is shallow as disclosed in the detailed description of FIG. **9** and FIG. **11**. The tension bearing members **204** and **205** are threaded over the pair of wire deflector plates **217** and **216** and passed through the slits **210** and **213** in the mold end members **208** and **211** respectively. In the embodiment exemplarily illustrated in FIG. **14**, the wire deflector plates **216** and **217** are separated by a large distance for creation of a long molded attachment block **1601** exemplarily illustrated in FIGS. **16**A-**16**B. The tension bearing members **204** and **205** are clamped between small bolt assemblies **231** and **232** respectively, within the constrained assembly **206**, to hold the tension generated in the tension bearing members **204** and **205**.

As exemplarily illustrated in FIG. **2** and FIG. **14** and as disclosed in the detailed description of FIG. **13**, the clamping devices **229** and **230** are removably positioned on the mold side members **227** and **228**. The clamping devices **229** and **230** comprise movable jaws **229***a* and **230***a* respectively, and stationary jaws **229***b* and **230***b* respectively, as exemplarily illustrated in FIG. **2** and FIGS. **14**-**15**. The movable jaws **229***a* and **230***a* are movable with respect to the stationary jaws **229***b* and **230***b* respectively. The stationary jaws **229***b* and **230***b* are integrated with rails **229***c* and **230***c* of the clamping devices **229** and **230** respectively. The movable jaws **229***a* and **230***a* of the clamping devices **229** and **230** respectively, are slidably engaged with the rails **229***c* and **230***c* of the clamping devices **229** and **230** respectively. As exemplarily illustrated in FIG. **14**, the movable jaws **229***a* and **230***a* of the clamping devices **229** and **230** respectively, are removably positioned on an outer surface **227***a* of the mold side member **227** at opposing ends **227***b* and **227***c* of the mold side member **227**, and the stationary

jaws **229***b* and **230***b* of the clamping devices **229** and **230** respectively, are positioned on an outer surface **228***a* of the mold side member **228** at opposing ends **228***b* and **228***c* of the mold side member **228**. That is, the movable jaw **229***a* of the clamping device **229** is positioned at one end **227***b* of the mold side member **227** on the outer surface **227***a* of the mold side member **227**, and the stationary jaw **229***b* of the clamping device **229** is positioned at one end **228***b* of the mold side member **228** on the outer surface **228***a* of the mold side member **228**. Similarly, the movable jaw **230***a* of the clamping device **230** is positioned at the opposing end **227***c* of the mold side member **227** on the outer surface **227***a* of the mold side member **227**, and the stationary jaw **230***b* of the clamping device **230** is positioned at the opposing end **228***c* of the mold side member **228** on the outer surface **228***a* of the mold side member **228**.

With a press of quick release lever buttons **229***d* and **230***d* of the clamping devices **229** and **230** respectively, the movable jaws **229***a* and **230***a* of the clamping devices **229** and **230** slide away from the stationary jaws **229***b* and **230***b* respectively. A press of trigger buttons **229***e* and **230***e* of the clamping devices **229** and **230** respectively, tightens the movable jaws **229***a* and **230***a* and the stationary jaws **229***b* and **230***b*. With each press of the trigger buttons **229***e* and **230***e* of the clamping devices **229** and **230** respectively, the movable jaws **229***a* and **230***a* and the stationary jaws **229***b* and **230***b* of the clamping devices **229** and **230** respectively, move towards each other, thereby pushing the mold side members **227** and **228** towards the mold end members **208** and **211** of the constrained assembly **206**. The mold side members **227** and **228** sandwich the mold end members **208** and **211** and a frictional force between the mold side members **227** and **228** and the mold end members **208** and **211** holds the mold end members **208** and **211** perpendicular to the surface **201***a* of the first object **201**. In embodiments where the tension bearing members **204** and **205** are under substantially high tensions, the mold side members **227** and **228** comprise receptacles (not shown) that mate with opposing ends of the mold end members **208** and **211** to hold the mold end members **208** and **211** perpendicular to the surface **201***a* of the first object **201**.

FIG. **15** exemplarily illustrates a top perspective view showing pouring of a viscous liquid **1501** on the assembly **200** comprising the constrained assembly **206**, the extended tension bearing members **204** and **205**, the anchoring grooves **202** and **203**, and the bolt assemblies **231** and **232** positioned above the surface **201***a* of the first object **201**, for creating the molded attachment block **1601** exemplarily illustrated in FIGS. **16**A-**16**B. The extended tension bearing members **204** and **205** that are under the generated tension are clamped between at least four bolt assemblies **231** and **232** respectively. As exemplarily illustrated in FIG. **2** and FIG. **15**, the tension bearing members **204** and **205** are clamped between the bolt assemblies **231** and **232** respectively, after passing over the wire deflector plates **217** and **216** and prior to passing through the slits **210** and **213** in the mold end members **208** and **211** respectively. The bolt assemblies **231** and **232** comprise bolt members **231***a* and **232***a*, upper washers **231***b* and **232***b*, lower washers **231***c* and **232***c*, and nuts **231***d* and **232***d* respectively, as exemplarily illustrated in FIG. **15**. The tension bearing member **204** is clamped between the upper washer **231***b* and the lower washer **231***c* of each of the two bolt assemblies **231**. Similarly, the tension bearing member **205** is clamped between the upper washer **232***b* and the lower washer **232***c* of each of the two bolt assemblies **232**. The tension bearing members **204** and **205** are squeezed and pressed between the upper washers **231***b* and **232***b* and the lower washers **231***c* and **232***c* by tightening the nuts **231***d* and **232***d* on the bolt members **231***a* and **232***a* of the bolt assemblies **231** and **232** respectively. The nuts **231***d* and **232***d* are tightened on the bolt members **231***a* and **232***a* of the bolt assemblies **231** and **232** respectively, by screwably threading the nuts **231***d* and **232***d* along the threads of the bolt members **231***a* and **232***a* of the bolt assemblies **231** and **232** respectively. The upper washers **231***b* and **232***b* and the lower washers **231***c* and **232***c* of the bolt assemblies **231** and **232** respectively, distribute load of the bolt members **231***a* and **232***a*. The bolt members **231***a* and **232***a* with the nuts **231***d* and **232***d* tighten the tension bearing members **204** and **205** respectively, to prevent rotation and lateral movement of the tension bearing members **204** and **205** after the poured viscous liquid **1501** hardens. The bolt members **231***a* and **232***a* are tightened by the respective nuts **231***d* and **232***d* to squeeze and press the tension bearing members **204** and **205** respectively, to grip the tension bearing members **204** and **205** under the generated tension after the viscous liquid **1501** hardens. The ends of the bolt members **231***a* and **232***a* of the bolt assemblies **231** and **232** respectively, suspend above the surface **201***a* of the first object **201**.

The viscous liquid **1501** is, for example, one of concrete, thermoplastics, soap, wax, etc., and any combination thereof. The viscous liquid **1501** changes from a liquid state to a solid state on drying or cooling. That is, if concrete is used as the viscous liquid **1501**, on drying, the concrete cures. In an embodiment where a thermoplastic is used as the viscous liquid **1501**, on cooling, the thermoplastic hardens. The viscous liquid **1501**, on solidifying, preserves the tension generated in the tension bearing members **204** and **205** and consequently preserves and withstands downward pressure on the constrained assembly **206**. The viscous liquid **1501** is poured using a container **1502**, for example, a hopper in a region defined by the mold end members **208** and **211** and the mold side members **227** and **228**, on the threaded members **214** and **215**, the anchoring grooves **202** and **203**, the wire deflector plates **216** and **217**, the extended tension bearing members **204** and **205**, the deflector connectors **218**, **219**, **220**, and **221**, the mold end connectors **222**, **223**, **224**, and **225**, and the four bolt assemblies **231** and **232**. In an embodiment, the viscous liquid **1501** is also poured and cured on the mold end members **208** and **211** for permanently retaining the mold end members **208** and **211** within the molded attachment block **1601**. In an embodiment, the viscous liquid **1501** is also poured and cured on the mold side members **227** and **228** for permanently retaining the mold side members **227** and **228** within the molded attachment block **1601**.

After the viscous liquid **1501** is cured, the viscous liquid **1501** that has transformed to a solid state surrounds and holds the bolt assemblies **231** and **232** that clamped the extended tension bearing members **204** and **205** firmly, thereby preserving the tension in the tension bearing members **204** and **205**. The tensioning device **226** is released after the viscous liquid **1501** is cured. The clamping devices **229** and **230** are removed from being in contact with the mold side members **227** and **228**. The mold side members **227** and **228** and in an embodiment, the mold end members **208** and **211** are also removed and the molded attachment block **1601** is created. The molded attachment block **1601** with the embedded threaded members **214** and **215** is mechanically created and attached on the surface **201***a* of the first object **201**, and in an embodiment, allows attachment of second objects to the first object **201**. In the embodiment where the viscous liquid **1501** is poured on the mold end members **208**

and **211**, the mold end members **208** and **211** are permanently retained within the molded attachment block **1601**. In the embodiment where the viscous liquid **1501** is poured on the mold side members **227** and **228**, the mold side members **227** and **228** are permanently retained within the molded attachment block **1601**.

FIGS. **16**A-**16**B exemplarily illustrate top perspective views of the molded attachment block **1601** created on curing of the poured viscous liquid **1501** shown in FIG. **15**, showing opposing ends **214***a*, **214***b* and **215***a*, **215***b* of the threaded members **214** and **215** respectively, of the constrained assembly **206**, extending from the molded attachment block **1601**. As exemplarily illustrated in FIG. **16**A, the ends **204***a*, **204***b* and **205***a*, **205***b* of the tension bearing members **204** and **205** respectively, and the opposing ends **214***a*, **214***b* and **215***a*, **215***b* of the threaded members **214** and **215** respectively, extend beyond the mold end members **208** and **211** and protrude outwardly. The tension bearing members **204** and **205**, the threaded members **214** and **215**, and the wire deflector plates **216** and **217** exemplarily illustrated in FIG. **2** and FIGS. **14**-**15**, are permanently retained in the molded attachment block **1601**. The ends **204***a*, **204***b* and **205***a*, **205***b* of the tension bearing members **204** and **205** respectively, protruding from the molded attachment block **1601** exemplarily illustrated in FIG. **16**A, are cut using a cutter (not shown) to generate the molded attachment block **1601** with only the threaded members **214** and **215**, for example, the threaded rods extending from the molded attachment block **1601** as exemplarily illustrated in FIG. **16**B. The threaded members **214** and **215** run through the length of the molded attachment block **1601** and protrude a distance from the molded attachment block **1601** appropriate for one or more other second objects, for example, brackets, hinges, etc., to be attached to the first object **201**. The threaded members **214** and **215** extend the length of the molded attachment block **1601** between the mold end members **208** and **211** and beyond the molded attachment block **1601**.

The tension in the tension bearing members **204** and **205** is preserved by the cured viscous liquid **1501** to produce a force that presses the molded attachment block **1601** against the surface **201***a* of the first object **201**, thereby allowing metallic mechanical second objects to be attached to non-metallic first objects. The attachment of the mold attachment block **1601** to the surface **201***a* of the first object **201** stores the tension in the tension bearing members **204** and **205** in a manner where inadvertent release of the stored tension in the tension bearing members **204** and **205** does not take place. In an embodiment, the surface **201***a* of the first object **201** is covered with a metallic material in entirety except for the anchoring grooves **202** and **203**. In this embodiment, the mold side members **227** and **228** are attached to the metallic surface **201***a* of the first object **201** and the viscous liquid **1501** is poured and cured. In this embodiment, the mold side members **227** and **228** are permanently retained within the molded attachment block **1601**. In an embodiment, the molded attachment block **1601** further comprises mechanical attachments, for example, a hook, a screw, rails, etc., for attaching one or more second objects, for example, hinges, brackets, etc., to the surface **201***a* of the first object **201**. In an embodiment, the assembly **200** exemplarily illustrated in FIG. **2**, constituting the molded attachment block **1601** is partially made of a metallic material. For example, the mold end members **208** and **211** and the mold side members **227** and **228** are made of a plastic material, while the extended tension bearing members **204** and **205** and the bolt assemblies **231** and **232** are made of the metallic material. In an example, for a first object **201** such as a tile made of a ceramic material, mold end members **208** and **211** made of a plastic material are used. The plastic mold end members **208** and **211** are used to preclude adherence of the viscous liquid **1501** to the plastic mold end members **208** and **211** when the viscous liquid **1501** cures, for allowing removal of the plastic mold end members **208** and **211** after creation of the molded attachment block **1601**. In another example, the mold end members **208** and **211** are made of a steel material comprising a non-stick coating. In an embodiment, the elements of the assembly **200**, for example, the mold end members **208** and **211**, the mold side members **227** and **228**, etc., can be replaced either partially or entirely with metal elements that remain with the first object **201** and can be modified to accommodate any mechanical attachments desired.

FIG. **17** exemplarily illustrates a top perspective view showing multiple molded attachment blocks **1601***a* and **1601***b* created on a surface **201***a* of a first object **201**, for example, a tile, made of a first material for attaching to one or more second objects (not shown) made of one or more second materials dissimilar to the first material of the first object **201**. For creating the molded attachment blocks **1601***a* and **1601***b*, some of the components of the assembly **200** exemplarily illustrated in FIG. **2**, for example, the mold end members **208** and **211** and the threaded members **214** and **215** of the constrained assembly **206**, the mold side members **227** and **228**, etc., are shared with another similar assembly **200**. The molded attachment blocks **1601***a* and **1601***b* can be created in different orientations on the first object **201** as exemplarily illustrated in FIG. **17**. Consider an example where the mold end members **208** and **211** or the threaded members **214** and **215** of the constrained assembly **206** are shared by two or more molded attachment blocks **1601***a* and **1601***b* on two different first objects, for example, two tiles. The molded attachment blocks **1601***a* and **1601***b* formed using the shared mold end members **208** and **211** or the shared threaded members **214** and **215** on the two first objects join the two first objects to each other without any bonding material. In an embodiment, the molded attachment blocks **1601***a* and **1601***b* are created independently on the surface **201***a* of the first object **201**.

FIG. **18** exemplarily illustrates a top perspective view of an embodiment of the assembly **200** exemplarily illustrated in FIG. **2**, herein referred to as the assembly **1800**, for creating a multi-tiered molded attachment block (not shown) on a surface **201***a* of a first object **201** made of a first material for attaching to one or more second objects made of one or more second materials dissimilar to the first material of the first object **201**. As used herein, "multi-tiered molded attachment block" is a molded attachment block comprising multiple tiers of threaded members. In the multi-tiered molded attachment block disclosed herein, the wire deflector plates **216** and **217** of the constrained assembly **206** are replaced by at least two wire deflector threaded members **233** and **234**. As exemplarily in FIG. **18**, the constrained assembly **206** comprises a pair of wire deflector threaded members **233** and **234** positioned above the threaded members **214** and **215**, for example, threaded rods, of the constrained assembly **206**. The wire deflector threaded members **233** and **234** are, for example, reinforcement bars, rectangular tubes, round tubes, round bars, rectangular bars, channels, angles, etc. The two wire deflector threaded members **233** and **234** are perpendicularly engaged with the mold side members **227** and **228** in the assembly **1800** for creating the multi-tiered molded attachment block. The wire deflector threaded members **233** and **234** perpendicularly engage

with the mold side members **227** and **228** using at least four deflector connectors **235**, **236**, **237**, and **238** comprising nuts and washers. The wire deflector threaded members **233** and **234** are positioned parallel to the mold end members **208** and **211** of the constrained assembly **206** and are symmetrical about the central line **207** between the mold end members **208** and **211**. The wire deflector threaded members **233** and **234** support and deflect the extended tension bearing members **204** and **205** firmly, thereby allowing creation of the multi-tiered molded attachment block.

The wire deflector threaded members **233** and **234** lie on top of and are, therefore, in contact with the threaded members **214** and **215** of the constrained assembly **206**. The threaded members **214** and **215** and the mold end members **208** and **211** of the constrained assembly **206** form a first tier of the multi-tiered molded attachment block. The wire deflector threaded members **233** and **234**, the extended tension bearing members **204** and **205**, and the mold side members **227** and **228** act as threaded members, tension bearing members, and mold end members of a second tier of the multi-tiered molded attachment block respectively. As the extended tension bearing members **204** and **205** are tensioned, the extended tension bearing members **204** and **205** exert a downward force on the wire deflector threaded members **233** and **234** in the second tier, and the wire deflector threaded members **233** and **234** in the second tier in turn exert a downward force on the threaded members **214** and **215** in the first tier. The multi-tiered molded attachment block is compact as multiple tension bearing members are absent from the constrained assembly **206**.

Similar to the creation of the molded attachment block **1601** from the assembly **200** exemplarily illustrated in FIG. **2**, at least four bolt assemblies **231** and **232** (not shown in FIG. **18**) are attached to and clamp the extended tension bearing members **204** and **205** at a position after either of the extended tension bearing members **204** and **205** crosses the wire deflector threaded members **233** and **234**. After the bolt assemblies **231** and **232** are attached to the extended tension bearing members **204** and **205**, a viscous liquid **1501** as exemplarily illustrated in FIG. **15**, is poured and cured on the assembly **1800** comprising the first tier and the second tier for creating the multi-tiered molded attachment block. In the multi-tiered molded attachment block disclosed herein, the ends **214***a*, **215***a* and **214***b*, **215***b* of the threaded members **214** and **215** extend beyond the mold end members **208** and **211** respectively. Similarly, the ends **233***a*, **234***a* and **233***b*, **234***b* of the wire deflector threaded members **233** and **234** extend beyond the mold side members **227** and **228** respectively. The extended ends **214***a*, **215***a* and **214***b*, **215***b* of the threaded members **214** and **215** and the ends **233***a*, **234***a* and **233***b*, **234***b* of the wire deflector threaded members **233** and **234** allow attachment to one or more second objects, for example, brackets, hinges, etc., similar to the molded attachment block **1601**. In an embodiment, the second objects attached to the multi-tiered molded attachment block at the ends **214***a*, **215***a* and **214***b*, **215***b* of the threaded members **214** and **215** and the ends **233***a*, **234***a* and **233***b*, **234***b* of the wire deflector threaded members **233** and **234** are perpendicular to and vertically offset from each other.

The foregoing examples have been provided merely for explanation and are in no way to be construed as limiting of the method and the molded attachment block **1601** disclosed herein. While the method and the molded attachment block **1601** have been described with reference to various embodiments, it is understood that the words, which have been used herein, are words of description and illustration, rather than words of limitation. Furthermore, although the method and the molded attachment block **1601** have been described herein with reference to particular means, materials, and embodiments, the method and the molded attachment block **1601** are not intended to be limited to the particulars disclosed herein; rather, the method and the molded attachment block **1601** extend to all functionally equivalent structures, methods and uses, such as are within the scope of the appended claims. While multiple embodiments are disclosed, it will be understood by those skilled in the art, having the benefit of the teachings of this specification, that the method and the molded attachment block **1601** disclosed herein are capable of modifications and other embodiments may be effected and changes may be made thereto, without departing from the scope and spirit of the method and the molded attachment block **1601** disclosed herein.

I claim:

1. A method for attaching a first object made of a first material to one or more second objects made of one or more of a plurality of second materials dissimilar to said first material of said first object without any bonding material, using a molded attachment block, said method comprising:

creating anchoring grooves at opposing sections on a surface of said first object made of said first material, wherein said anchoring grooves anchor tension bearing members on said first object;

positioning a constrained assembly comprising mold end members and threaded members, proximal to said created anchoring grooves at said opposing sections on said surface of said first object, said mold end members comprising openings for receiving and perpendicularly engaging opposing ends of said threaded members;

extending said tension bearing members from said created anchoring grooves in opposing directions along a length of said constrained assembly via said mold end members;

generating a tension in said extended tension bearing members using a tensioning device;

positioning mold side members perpendicular to said mold end members of said constrained assembly and along said length of said constrained assembly on said surface of said first object;

constricting said constrained assembly between said mold side members using clamping devices removably positioned on said mold side members;

clamping said extended tension bearing members under said generated tension between at least four bolt assemblies positioned above said surface of said first object within said constrained assembly for gripping said extended tension bearing members; and

pouring and curing a viscous liquid on said constrained assembly, said extended tension bearing members, said anchoring grooves, and said at least four bolt assemblies for creating said molded attachment block with said opposing ends of said threaded members of said constrained assembly extending outwardly from said molded attachment block, wherein said extended opposing ends of said threaded members allow attachment of said one or more second objects made of said one or more of said second materials dissimilar to said first material of said first object to said surface of said first object without any said bonding material.

2. The method of claim **1**, further comprising cutting ends of said tension bearing members extending outwardly from said created molded attachment block in said opposing directions.

3. The method of claim 1, wherein said anchoring grooves are created at locations symmetrical about a central line between said mold end members of said constrained assembly.

4. The method of claim 1, wherein each of said mold end members comprises slits for receiving said tension bearing members extending from said anchoring grooves in said opposing directions.

5. The method of claim 1, wherein said constrained assembly further comprises at least two wire deflector plates positioned parallel to said mold end members and connected to said threaded members symmetrically about a central line between said mold end members using at least four deflector connectors.

6. The method of claim 5, wherein each of said at least two wire deflector plates comprises a plate section and wing sections extending from opposing sides of said plate section, wherein said plate section deflects said extended tension bearing members, and wherein said wing sections are connected to said threaded members symmetrically about said central line between said mold end members using said at least four deflector connectors.

7. The method of claim 1, wherein said constrained assembly comprises at least two wire deflector threaded members positioned above said threaded members of said constrained assembly and perpendicularly engaged with said mold side members using at least four deflector connectors for supporting and deflecting said extended tension bearing members, thereby allowing creation of a multi-tiered molded attachment block, wherein said at least two wire deflector threaded members are symmetrical about a central line between said mold end members of said constrained assembly.

8. The method of claim 7, wherein said at least two wire deflector threaded members are one of reinforcement bars, rectangular tubes, round tubes, round bars, rectangular bars, channels, and angles.

9. The method of claim 1, wherein said cured viscous liquid preserves said generated tension in said tension bearing members and withstands downward pressure on said constrained assembly.

10. The method of claim 1, wherein said viscous liquid is one of concrete, thermoplastics, soap, wax, and any combination thereof.

11. The method of claim 1, further comprising removing said clamping devices and said mold side members from said created molded attachment block after said curing of said poured viscous liquid.

12. The method of claim 1, further comprising removing said mold end members of said constrained assembly from said created molded attachment block after said curing of said poured viscous liquid.

13. The method of claim 1, wherein said viscous liquid is poured and cured on said mold side members for permanently retaining said mold side members within said created molded attachment block.

14. The method of claim 1, wherein said threaded members of said constrained assembly are one of reinforcement bars, rectangular tubes, round tubes, round bars, rectangular bars, channels, and angles.

15. The method of claim 1, wherein said first object has a constant surface geometry.

* * * * *